LITERATURE LANE

OFF LITTLE LA TROBE ST,

PITCHER LANEWAY RECONSTRUCTION

CONSTRUCTION NOTES

1. ALL DIMENSIONS AND RELEVANT SETOUT POINTS SHALL BE CONFIRMED AND VERIFIED BY THE CONTRACTOR BEFORE CONSTRUCTION IS COMMENCED. THE CONTRACTOR SHALL REPORT ANY DISCREPANCIES TO THE PROJECT MANAGER.
2. THESE DRAWINGS SHALL BE READ IN CONJUNCTION WITH THE SPECIFICATIONS AND DRAWINGS ISSUED BY THE PROJECT MANAGER AND WITH SUCH OTHER WRITTEN INSTRUCTIONS AS MAY BE ISSUED DURING THE COURSE OF THE CONTRACT.
3. THE CONTRACTOR SHALL CHECK ALL SERVICE LOCATIONS PRIOR TO COMMENCING WORK.
4. CARE MUST BE TAKEN WHEN EXCAVATING IN THE VICINITY OF SERVICES.
5. THE CONTRACTOR SHALL MAINTAIN THE WORK SITE IN A SAFE AND TRAFFICABLE CONDITION.
6. THE CONTRACTOR SHALL ERECT AND MAINTAIN ALL SHORING, PLANKING, AND STRUTTING, DEWATERING DEVICES, BARRICADES, SIGNS, LIGHTS, ETC NECESSARY TO KEEP WORKS IN A SAFE AND STABLE CONDITION AND FOR THE PROTECTION OF THE PUBLIC.
7. THE CONTRACTOR SHALL ENSURE THAT NO POLLUTED OR SEDIMENT LADEN RUNOFF ENTERS ANY DRAIN OR WATERCOURSE. THE CONTRACTOR SHALL ENSURE THAT PRECAUTIONS ARE TAKEN TO PREVENT EMISSION OF DUST, WHETHER FROM THE OPERATION OF CONSTRUCTION EQUIPMENT OR OTHERWISE.
8. DISPOSAL OF EXCESS SPOIL:- TRUCK ROUTE AND DISPOSAL LOCATION TO BE APPROVED BY THE PROJECT MANAGER.
9. SAWCUT AT ALL LIMIT OF WORKS EXISTING PAVEMENTS:
   ASPHALT FOOTPATH - SAWCUT 75mm DEPTH
   ASPHALT ROADWAY - SAWCUT 125mm DEPTH
10. THE CONTRACTOR SHALL TRANSFER TBM'S OUT OF CONSTRUCTION AREA PRIOR TO COMMENCEMENT OF EXCAVATION WORKS.
11. THE PARKING OF PLANT AND STOCKPILING OF MATERIALS WITHIN THE WORKS SITE SHALL BE AT LOCATIONS AGREED BY THE PROJECT MANAGER
12. UPON COMPLETION THE WHOLE SITE SHALL BE CLEANED UP AND ALL RUBBISH REMOVED AND SITE LEFT IN A CLEAN AND TIDY CONDITION TO THE SATISFACTION OF THE PROJECT MANAGER.

DRAINAGE NOTES

D1. ALL REINFORCED CONCRETE PIPES (RCP) SHALL BE CLASS 2 (UNLESS OTHERWISE NOTED) AND COMPLY WITH AS 4058.

D2. ALL REINFORCED CONCRETE PIPES AND ALL UPVC PIPES 225Φ OR GREATER SHALL BE RUBBER RING

D3. ALL SUBSURFACE DRAINS TO BE 100 DIA. SLOTTED UPVC PIPE AND INSTALLED TO MIN. DEPTHS.

D4. LAYING OF PIPES SHALL BE IN ACCORDANCE WITH THE PROVISIONS OF THE SPECIFICATION.

D5. PIPE LAYING SHALL COMMENCE AT THE DOWNSTREAM END OF WORK.

D6. THE SIZE OF INGROUND PIPES CONNECTING TO DOWNPIPES SHALL MATCH DOWNPIPE SIZE U.N.O.

OH&S DRAINAGE NOTES

1. CONTRACTOR TO CHECK FOR CONTAMINANTS PRIOR TO ENTERING DRAINAGE SYSTEM.
2. CONTRACTOR TO INTRODUCE MANUAL HANDLING PROCEDURES PRIOR TO CONSTRUCTION AND MAINTENANCE WORKS.
3. CONTRACTOR TO INTRODUCE SAFE MAINTENANCE PROCEDURES PRIOR TO UNDERTAKING MAINTENANCE WORKS ON THESE ASSETS.
4. ALL EXCAVATION AND TRENCHING TO COMPLY WITH OH&S ACT AND RELEVANT GUIDELINES

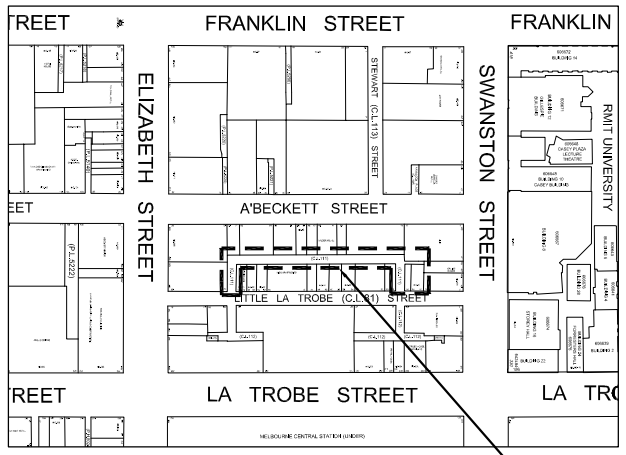

LOCALITY MAP

NOT TO SCALE

LOCATION OF WORKS

CONSTRUCTION LEGEND

- EXCAVATE EXISTING BLUESTONE PITCHERS AND CUT TOP SURFACE MAXIMUM 20mm AND RELAY FLUSH AS PER MCC STD. DWG 1P50409 REFER TO SECTION A - A SHEET 14
- RECONSTRUCT EXISTING BLUESTONE PITCHER LANEWAY AS PER MCC STD DWG 1P50407. LIFT CLEAN AND RESET BLUESTONE PITCHERS. REPLACE MISSING PITCHERS AS REQUIRED. REFER TO SECTION B -B SHEET 14
- EXCAVATE 150mm BELOW DESIGN LEVELS AND CONSTRUCT CBD ASPHALT FOOTPATH WITH:
  - 35mm OF SIZE 7mm HMA TYPE N
  - 65mm OF SIZE 14mm HMA TYPE N
  - 50mm MIN OF CLASS 2 COMPACTED FINE CRUSHED ROCK
- RECONSTRUCT ASPHALT VEHICLE CROSSING. REFER TO MCC STD. DWG. 1P50104.
- SUPPLY & SET NEW 300mm BLUESTONE KERB, LIFT AND RESET SINGLE ROW PITCHER CHANNEL WITH 25mm STEP DOWN. REFER TO SECTION DETAILS
- DP — REMOVE EXISTING DOWNPIPE CONNECTION TO KERB AND CONNECT DOWNPIPE AS PER COM STANDARD DRAWING 50303. REPLACE EXISTING UPVC DOWNPIPE WITH 100mmΦ SEWER GRADE PIPE.
- (1) PIT IDENTIFICATION NUMBER
- SUPPLY AND LAY NEW DRAINAGE PIPE. REFER TO DRAIN LONGITUDINAL SECTION.
- PROPOSED 63mmΦ HEAVY DUTY PVC CONDUIT TO STANDARD PRECAST CABLE PITS OR AS SPECIFIED BY CITIPOWER. LOCATION OF ELECTRICAL PITS AND CONDUITS TO BE CONFIRMED AS PER CITIPOWER REQUIREMENTS

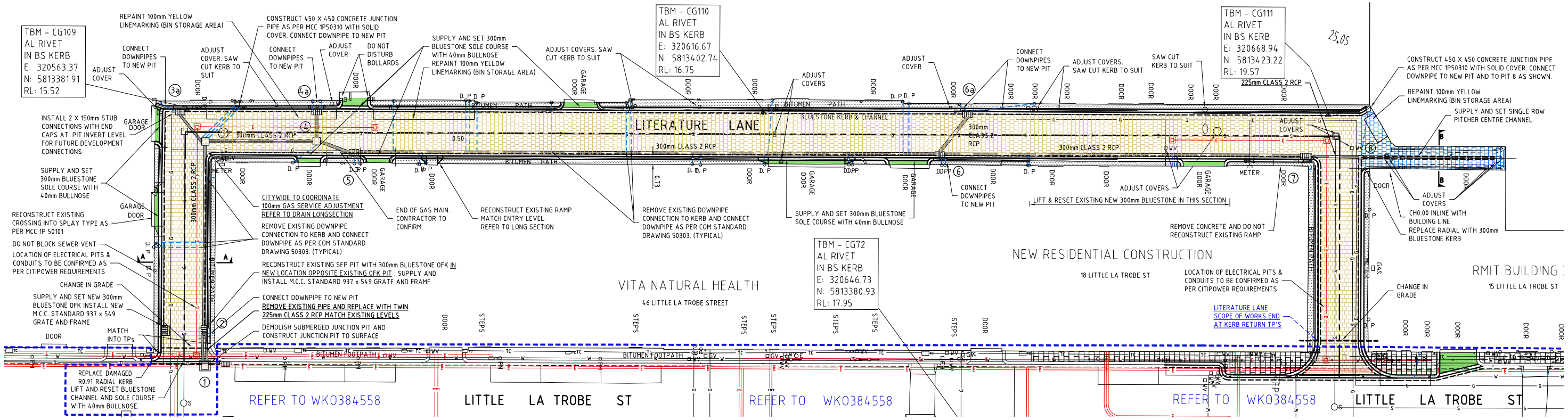

CONSTRUCTION PLAN

1:200

MELBOURNE ONE CALL SYSTEM — DIAL 1100 — DIAL BEFORE YOU DIG

WARNING

BEWARE OF UNDERGROUND SERVICES

THE LOCATION OF UNDERGROUND SERVICES ARE APPROXIMATE ONLY AND THEIR EXACT POSITION SHOULD BE PROVEN ON SITE. NO GUARANTEE IS GIVEN THAT ALL EXISTING SERVICES ARE SHOWN.

Cardno Grogan Richards
Consulting Engineers
Structural, Civil, Hydraulic, Traffic & Transportation

Cardno Victoria Pty Ltd ABN 47 106 610 913
150 Oxford Street Collingwood, VIC 3066
Tel: 03 8415 7777 Fax: 03 8415 7788
cardno@cardno.com.au www.cardno.com.au

Rev.	Revision Details	By	Date
B	PRELIMINARY ISSUE (RAMP REMOVED NEAR PIT 7)	PM	28/01/2015
A	PRELIMINARY ISSUE	PM	01/12/2014

CAD FILE	WK0338913	PROJECT NUMBER	-
DESIGNED BY	P. MITROVSKI	CONCEPT DOCS NO.	-
DRAWN BY	P. MITROVSKI	SURVEY REFERENCE	CARDNO
CHECKED	M. BRAJANOVSKI	SCALE	1:200
CHECKED DATE	-	DATUM	MGA94/AHD

North Point

CITY OF MELBOURNE

ENGINEERING SERVICES

APPROVED BY

Principal Engineer	Group Manager
-	-
Date -	Date -

STATUS: PRELIMINARY ISSUE

JOB LOCATION: LITERATURE LANE
OFF LITTLE LA TROBE STREET
PITCHER LANEWAY RECONSTRUCTION
LAYOUT PLAN

DRAWING NUMBER: WK0338913

NUMBER OF SHEETS: 1 OF 14

REVISION: B

DOCS NUMBER: -

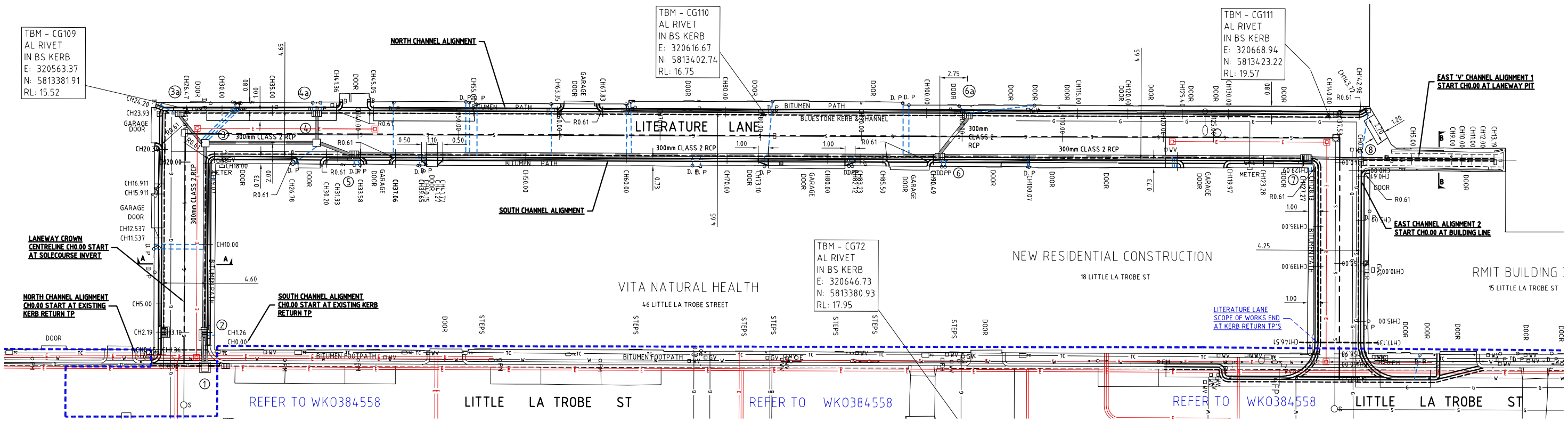

SETOUT PLAN

1:200

Cardno Grogan Richards
Consulting Engineers
Structural, Civil, Hydraulic, Traffic & Transportation

Cardno Victoria Pty Ltd ABN 47 106 610 913
150 Oxford Street Collingwood, VIC 3066
Tel: 03 8415 7777 Fax: 03 8415 7788
cardno@cardno.com.au www.cardno.com.au

Rev.	Revision Details	By	Date
B	PRELIMINARY ISSUE (RAMP REMOVED NEAR PIT 7)	PM	28/01/2015
A	PRELIMINARY ISSUE	PM	01/12/2014

CAD FILE	WK0338913	PROJECT NUMBER	-
DESIGNED BY	P. MITROVSKI	CONCEPT DOCS NO.	-
DRAWN BY	P. MITROVSKI	SURVEY REFERENCE	CARDNO
CHECKED	M. BRAJANOVSKI	SCALE	1:200
CHECKED DATE	-	DATUM	MGA94/AHD

North Point

CITY OF MELBOURNE

ENGINEERING SERVICES

APPROVED BY

Principal Engineer	Group Manager
-	-
Date -	Date -

STATUS: PRELIMINARY ISSUE

JOB LOCATION:
LITERATURE LANE
OFF LITTLE LA TROBE STREET
PITCHER LANEWAY RECONSTRUCTION
SETOUT PLAN

DRAWING NUMBER: WK0338913

NUMBER OF SHEETS: 2 OF 14

REVISION: B

DOCS NUMBER: -

MELBOURNE ONE CALL SYSTEM
DIAL 1100
DIAL BEFORE YOU DIG

WARNING
BEWARE OF UNDERGROUND SERVICES
THE LOCATION OF UNDERGROUND SERVICES ARE APPROXIMATE ONLY AND THEIR EXACT POSITION SHOULD BE PROVEN ON SITE. NO GUARANTEE IS GIVEN THAT ALL EXISTING SERVICES ARE SHOWN.

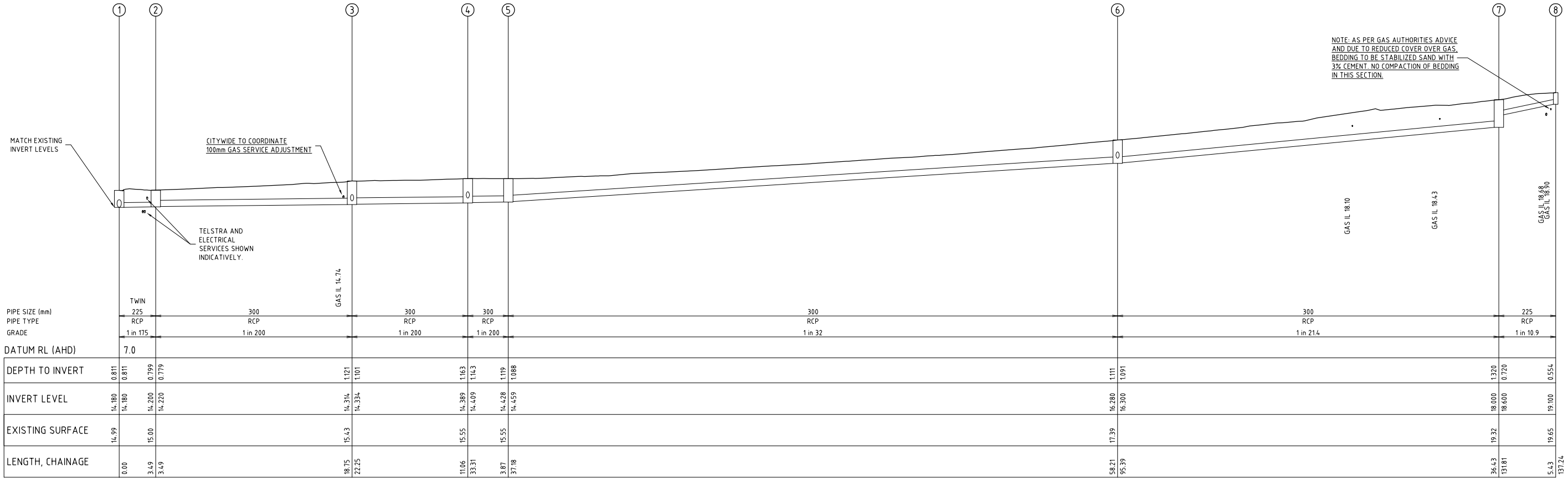

	1–2	2–3	3–4	4–5	5–6	6–7	7–8
PIPE SIZE (mm)	TWIN 225	300	300	300	300	300	225
PIPE TYPE	RCP	RCP	RCP	RCP	RCP	RCP	RCP
GRADE	1 in 175	1 in 200	1 in 200	1 in 200	1 in 32	1 in 21.4	1 in 10.9
DATUM RL (AHD)	7.0						
DEPTH TO INVERT	0.811, 0.811, 0.799, 0.779	1.121, 1.101	1.163, 1.143	1.119, 1.088	1.111, 1.091	1.320, 0.720	0.554
INVERT LEVEL	14.180, 14.180, 14.200, 14.220	14.314, 14.334	14.389, 14.409	14.428, 14.459	16.280, 16.300	18.000, 18.600	19.100
EXISTING SURFACE	14.99, 15.00	15.43	15.55, 15.55		17.39	19.32	19.65
LENGTH, CHAINAGE	0.00, 3.49, 3.49	18.75, 22.25	11.06, 33.31	3.87, 37.18	58.21, 95.39	36.43, 131.81	5.43, 137.24

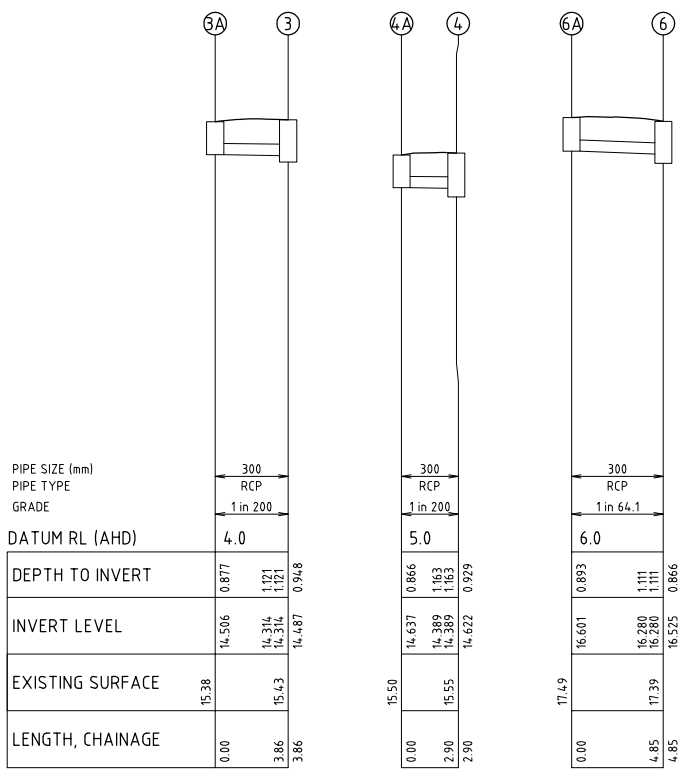

	3A–3	4A–4	6A–6
PIPE SIZE (mm)	300	300	300
PIPE TYPE	RCP	RCP	RCP
GRADE	1 in 200	1 in 200	1 in 64.1
DATUM RL (AHD)	4.0	5.0	6.0
DEPTH TO INVERT	0.877, 1.121, 1.121, 0.948	0.866, 1.163, 1.163, 0.929	0.893, 1.111, 1.111, 0.866
INVERT LEVEL	14.506, 14.314, 14.314, 14.487	14.637, 14.389, 14.389, 14.622	16.601, 16.280, 16.280, 16.525
EXISTING SURFACE	15.38, 15.43	15.50, 15.55	17.49, 17.39
LENGTH, CHAINAGE	0.00, 3.86, 3.86	0.00, 2.90, 2.90	0.00, 4.85, 4.85

NOTE: ALL SERVICE IL'S ARE TO TOP OF SERVICE

DRAINAGE LONGITUDINAL SECTION

H 1:200, V 1:100

PIT SCHEDULE

PIT NO	TYPE	PIT SIZE	INLET DIA	INLET INV LEV	OUTLET DIA	OUTLET INV LEV	COVER LEVEL	COVER/ GRATE TYPE	PIT DEPTH	REMARKS
1	JP	750 x 750	2 x225	14.180			14.991	INSTALL NEW 750 x 750 HEAVY DUTY SOLID GATIC	0.81	CONSTRUCT JUNCTION PIT AS PER STD DWG 1P50318 AND CONNECT NEW DRAINS. MATCH EXISTING INVERTS
2	GOFK	950 x 750	300	14.220	225	14.200	14.999	SUPPLY AND INSTALL M.C.C. STANDARD 937 x 549 GRATE AND FRAME	0.80	RECONSTRUCT GRATED PIT WITH NEW BLUESTONE OFK. (REFER TO PIT 2 DETAIL)
3	JP	750 x 750	300	14.334	300	14.314	15.435	INSTALL NEW 750 x 750 HEAVY DUTY SOLID GATIC	1.12	CONSTRUCT JUNCTION PIT AS PER STD DWG 1P50318 AND CONNECT NEW DRAINS.
			300	14.487			15.435		1.10	
4	JP	750 x 750	300	14.409	300	14.389	15.552	INSTALL NEW 750 x 750 HEAVY DUTY SOLID GATIC	1.16	CONSTRUCT JUNCTION PIT AS PER STD DWG 1P50318 AND CONNECT NEW DRAINS.
			300	14.622			15.552		1.14	
5	GOFK	950 x 750	300	14.459	300	14.428	15.547	SUPPLY AND INSTALL M.C.C. STANDARD 937 x 549 GRATE AND FRAME	1.12	CONSTRUCT GRATED PIT WITH NEW BLUESTONE OFK AS PER MCC STD DWG 1P 50301
6	GOFK	950 x 750	300	16.300	300	16.280	17.391	SUPPLY AND INSTALL M.C.C. STANDARD 937 x 549 GRATE AND FRAME	1.11	CONSTRUCT GRATED PIT WITH NEW BLUESTONE OFK AS PER MCC STD DWG 1P 50301
			300	16.525			17.391		1.09	
7	GOFK	950 x 750	225	18.600	300	18.000	19.320	SUPPLY AND INSTALL M.C.C. STANDARD 937 x 549 GRATE AND FRAME	1.32	CONSTRUCT GRATED PIT WITH NEW BLUESTONE OFK AS PER MCC STD DWG 1P 50301 INSTALL STEP IRONS.
8	LANE GRATE	450 x 450			225	19.100	19.654	SUPPLY AND INSTALL M.C.C. STANDARD 450 X 450 LANE TYPE GRATE AND FRAME	0.55	CONSTRUCT LANE TYPE PIT AS PER MCC STD DWG 1P 50310
3A	GOFK	950 x 750			300	14.506	15.383	SUPPLY AND INSTALL M.C.C. STANDARD 937 x 549 GRATE AND FRAME	0.88	CONSTRUCT GRATED PIT WITH NEW BLUESTONE OFK AS PER MCC STD DWG 1P 50301. INSTALL 2 X 150mm STUB CONNECTIONS WITH END CAPS AT PIT INVERT LEVEL FOR FUTURE CONNECTIONS
4A	GOFK	950 x 750			300	14.637	15.503	SUPPLY AND INSTALL M.C.C. STANDARD 937 x 549 GRATE AND FRAME	0.87	CONSTRUCT GRATED PIT WITH NEW BLUESTONE OFK AS PER MCC STD DWG 1P 50301
6A	GOFK	950 x 750			300	16.601	17.493	SUPPLY AND INSTALL M.C.C. STANDARD 937 x 549 GRATE AND FRAME	0.89	CONSTRUCT GRATED PIT WITH NEW BLUESTONE OFK AS PER MCC STD DWG 1P 50301

WARNING
BEWARE OF UNDERGROUND SERVICES
THE LOCATION OF UNDERGROUND SERVICES ARE APPROXIMATE ONLY AND THEIR EXACT POSITION SHOULD BE PROVEN ON SITE. NO GUARANTEE IS GIVEN THAT ALL EXISTING SERVICES ARE SHOWN.

MELBOURNE ONE CALL SYSTEM DIAL 1100 DIAL BEFORE YOU DIG

Cardno Grogan Richards
Consulting Engineers
Structural, Civil, Hydraulic, Traffic & Transportation
Cardno Victoria Pty Ltd ABN 47 106 610 913
150 Oxford Street Collingwood, VIC 3066
Tel: 03 8415 7777 Fax: 03 8415 7788
cardno@cardno.com.au www.cardno.com.au

Rev.	Revision Details	By	Date
B	PRELIMINARY ISSUE (RAMP REMOVED NEAR PIT 7)	PM	28/01/2015
A	PRELIMINARY ISSUE	PM	01/12/2014

CAD FILE	WK0338913	PROJECT NUMBER	-
DESIGNED BY	P. MITROVSKI	CONCEPT DOCS NO.	-
DRAWN BY	P. MITROVSKI	SURVEY REFERENCE	CARDNO
CHECKED	M. BRAJANOVSKI	SCALE	1:200
CHECKED DATE	-	DATUM	MGA94/AHD

North Point

CITY OF MELBOURNE

ENGINEERING SERVICES

APPROVED BY
Principal Engineer -
Group Manager -
Date -
Date -

STATUS: PRELIMINARY ISSUE

JOB LOCATION
LITERATURE LANE
OFF LITTLE LA TROBE STREET
PITCHER LANEWAY RECONSTRUCTION
DRINAGE LONGITUDINAL SECTION & PIT SCHEDULE

DRAWING NUMBER: WK0338913
NUMBER OF SHEETS: 3 OF 14
REVISION: B
DOCS NUMBER: -

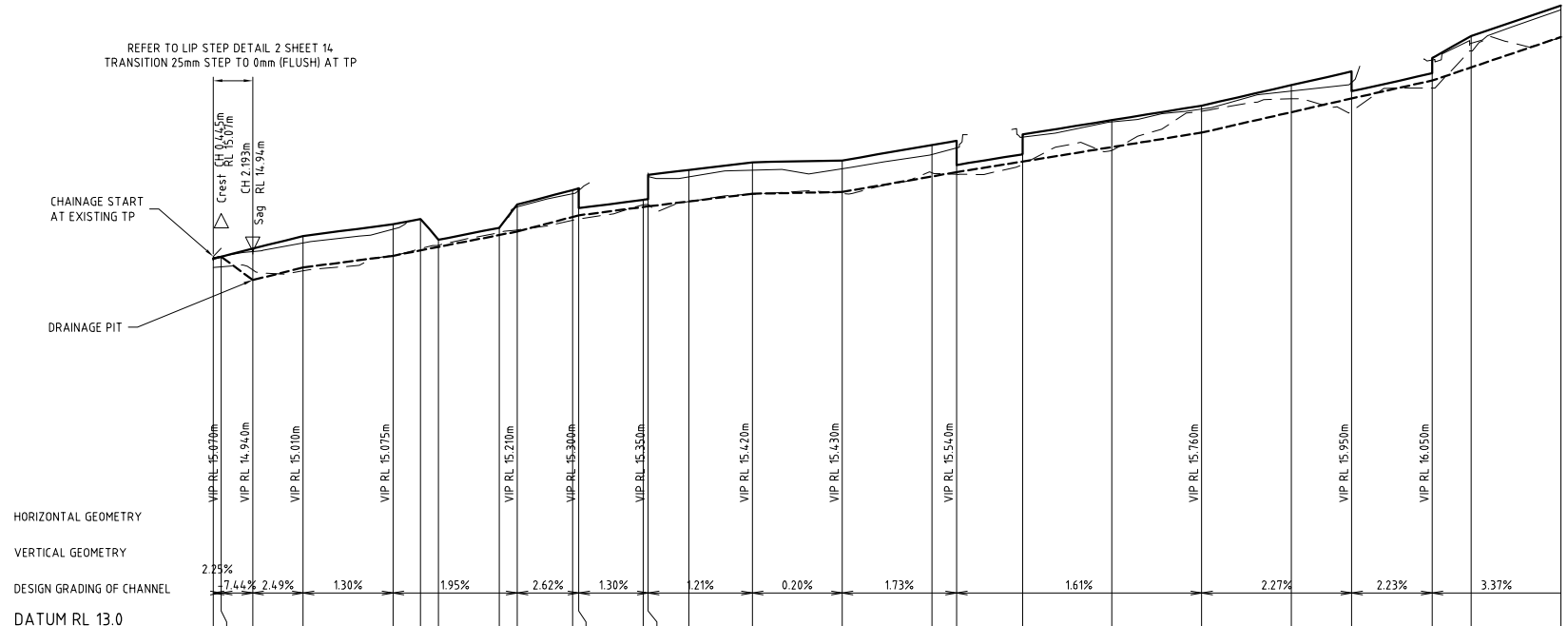

DESIGN CHANNEL INVERT	15.060	15.070	14.940	15.010	15.075	15.105	15.125	15.190	15.210	15.291	15.300	15.346	15.350	15.377	15.420	15.430	15.516	15.540	15.599	15.679	15.760	15.874	15.950	16.050	16.123	16.292
DESIGN TOP OF KERB	15.060	15.07	15.115	15.185	15.25	15.28	15.165	15.23	15.36	15.441	15.45	15.386	15.525	15.552	15.595	15.605	15.691	15.715	15.749	15.829	15.91	16.024	15.99	16.175	16.298	16.467
EXISTING BACK OF KERB	15.065	15.073	15.099	15.146	15.223			15.347		15.420	15.438			15.514	15.551	15.560	15.638	15.675	15.736	15.819	15.892	15.991	16.039	16.164	16.257	16.442
EXISTING CHANNEL INVERT	15.010	15.013	14.997	14.991	15.078	15.115	15.134	15.203	15.219	15.272	15.279	15.358	15.361	15.377	15.418	15.422	15.537	15.529	15.584	15.661	15.880	15.948	15.880	16.007	16.214	16.288
CHAINAGE	0.00	0.45	2.19	5.00	10.00	11.54	12.54	15.91	16.91	20.00	20.34	23.93	24.20	26.47	30.00	35.00	40.00	41.36	45.05	50.00	55.00	60.00	63.35	67.83	70.00	75.00

North Channel Alignment - LONGITUDINAL SECTION

Scale H: 1:200
V: 1:20

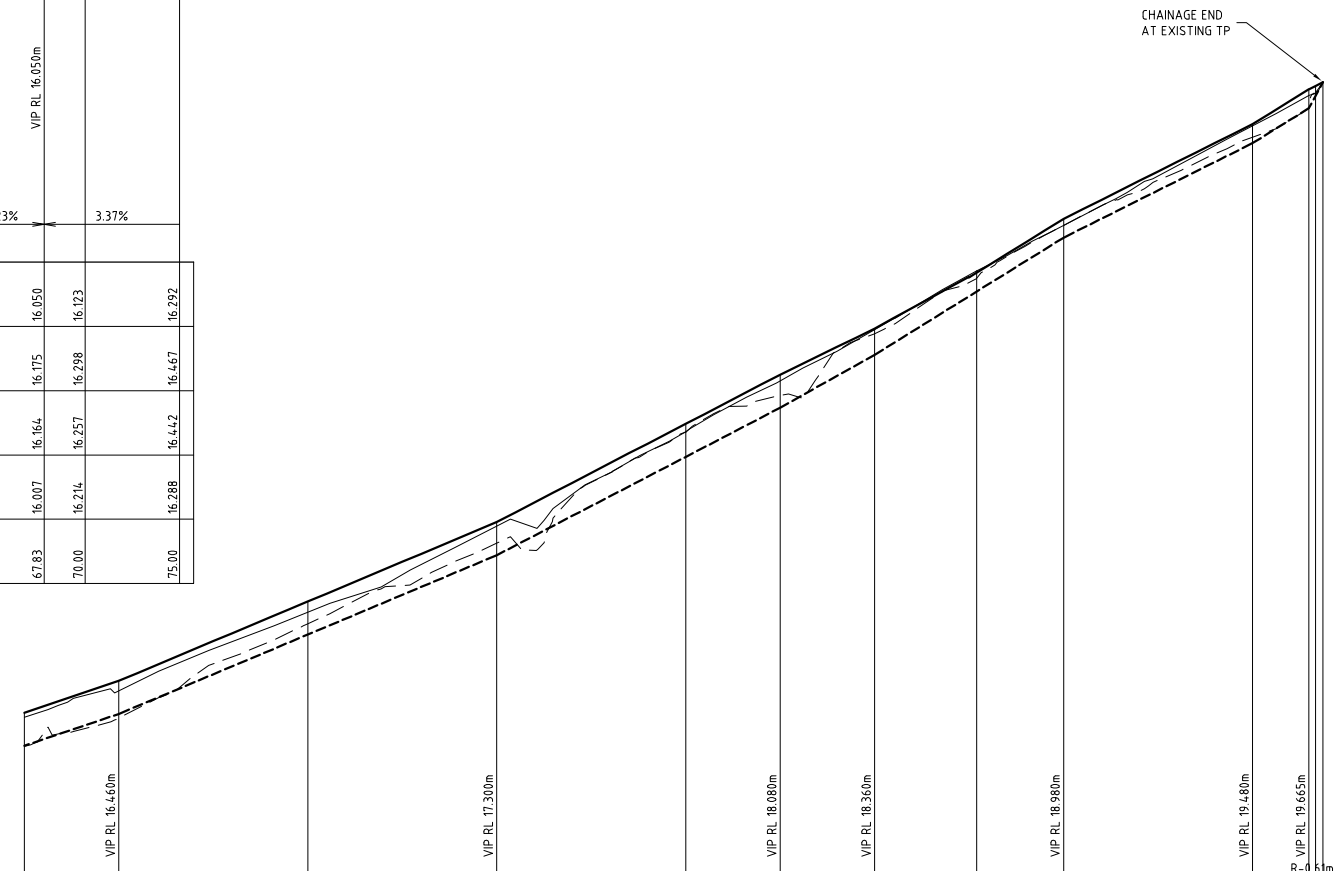

DESIGN CHANNEL INVERT	16.292	16.460	16.880	17.300	17.820	18.080	18.360	18.695	18.980	19.480	19.665	19.729	19.802
DESIGN TOP OF KERB	16.467	16.635	17.055	17.475	17.995	18.255	18.499	18.795	19.08	19.58	19.765	19.783	19.802
EXISTING BACK OF KERB	16.442	16.583	16.998	17.453	17.954	18.222	18.493	18.804	19.045	19.572	19.733	19.733	19.799
EXISTING CHANNEL INVERT	16.288	16.438	16.937	17.364	17.951	18.144	18.472	18.764	19.045	19.512	19.663	19.663	19.802
CHAINAGE	75.00	80.00	90.00	100.00	110.00	115.00	120.00	125.40	130.00	140.00	142.98	143.33	143.72

North Channel Alignment - LONGITUDINAL SECTION

Scale H: 1:200
V: 1:20

Cardno Grogan Richards
Consulting Engineers
Structural, Civil, Hydraulic, Traffic & Transportation

Cardno Victoria Pty Ltd ABN 47 106 610 913
150 Oxford Street Collingwood, VIC 3066
Tel: 03 8415 7777 Fax: 03 8415 7788
cardno@cardno.com.au www.cardno.com.au

Rev.	Revision Details	By	Date
B	PRELIMINARY ISSUE (RAMP REMOVED NEAR PIT 7)	PM	28/01/2015
A	PRELIMINARY ISSUE	PM	01/12/2014

CAD FILE	WK0338913	PROJECT NUMBER	-
DESIGNED BY	P. MITROVSKI	CONCEPT DOCS NO.	-
DRAWN BY	P. MITROVSKI	SURVEY REFERENCE	CARDNO
CHECKED	M. BRAJANOVSKI	SCALE	1:200
CHECKED DATE	-	DATUM	MGA94/AHD

North Point

CITY OF MELBOURNE

ENGINEERING SERVICES

APPROVED BY

Principal Engineer	Group Manager
-	-
Date -	Date -

STATUS: PRELIMINARY ISSUE

JOB LOCATION:
LITERATURE LANE
OFF LITTLE LA TROBE STREET
PITCHER LANEWAY RECONSTRUCTION
NORTH CHANNEL ALIGNMENT LONGITUDINAL SECTION

DRAWING NUMBER: WK0338913

NUMBER OF SHEETS: 4 OF 14

REVISION: B

DOCS NUMBER: -

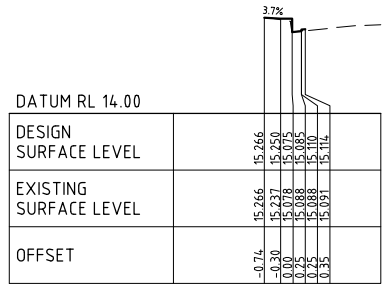

CH 10

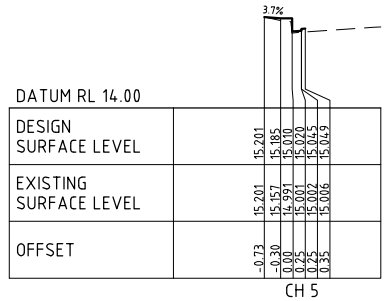

CH 5

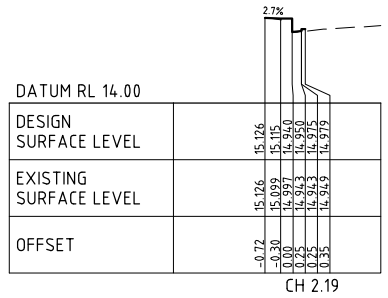

CH 2.19

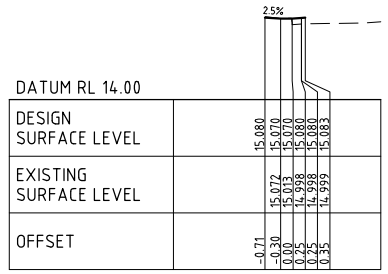

CH 0.45

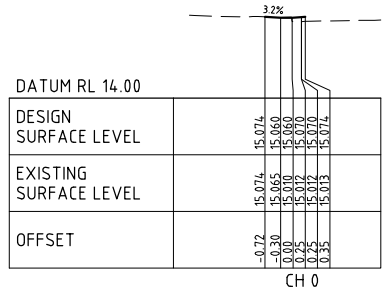

CH 0

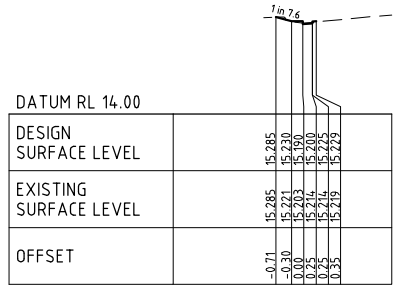

CH 15.91

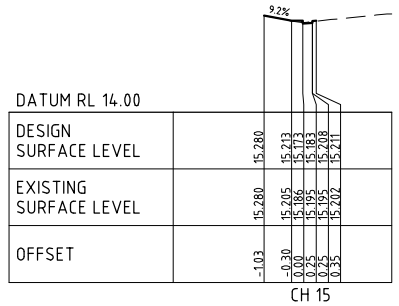

CH 15

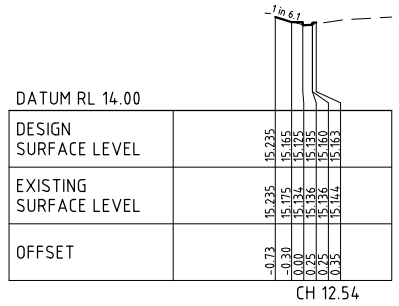

CH 12.54

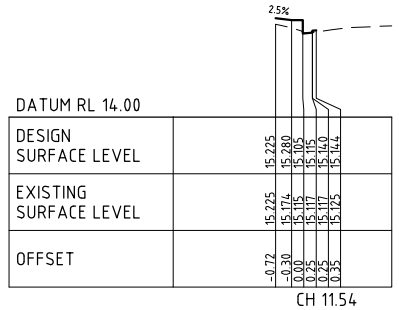

CH 11.54

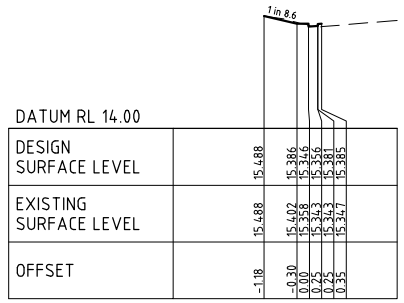

CH 23.93

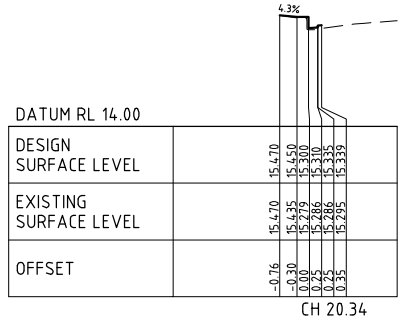

CH 20.34

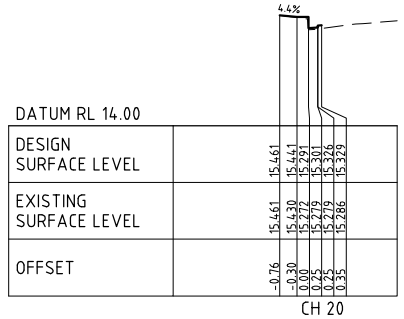

CH 20

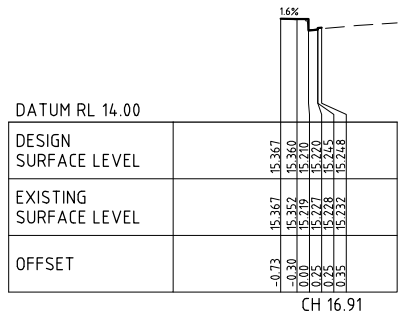

CH 16.91

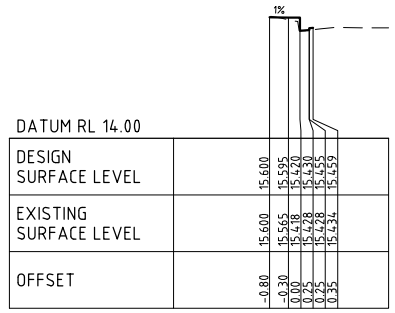

CH 30

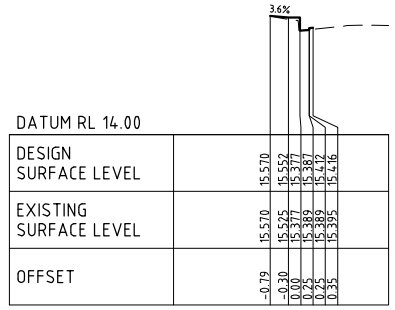

CH 26.47

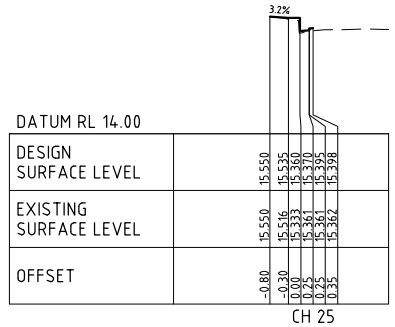

CH 25

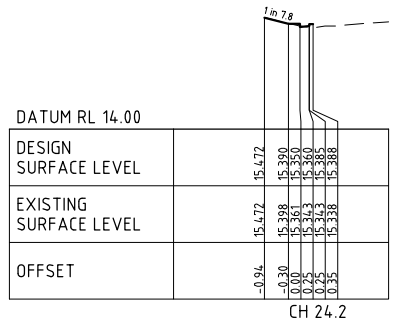

CH 24.2

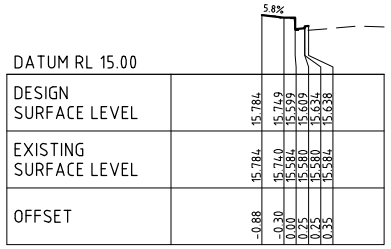

CH 45.05

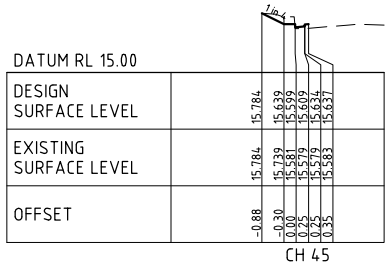

CH 45

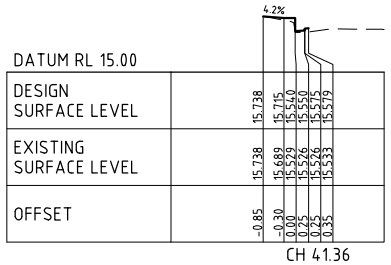

CH 41.36

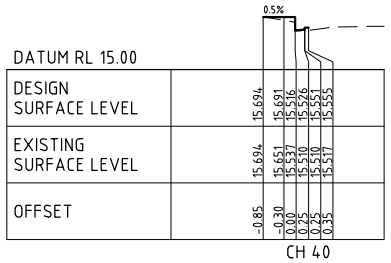

CH 40

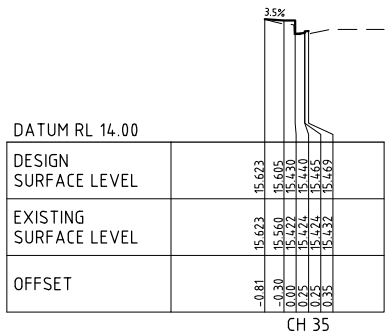

CH 35

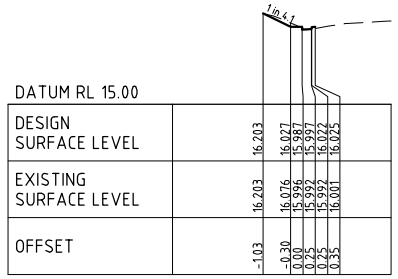

CH 65

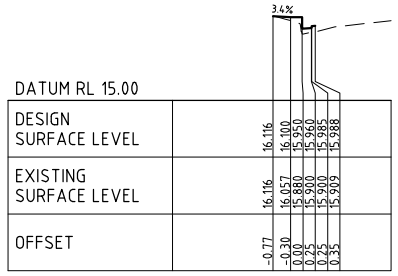

CH 63.35

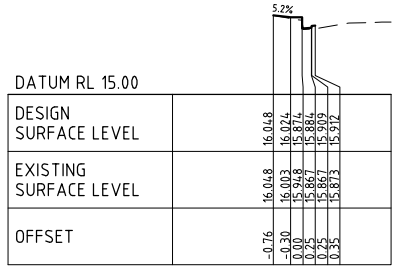

CH 60

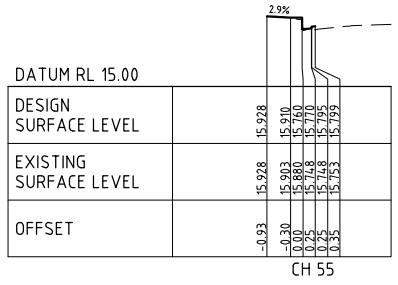

CH 55

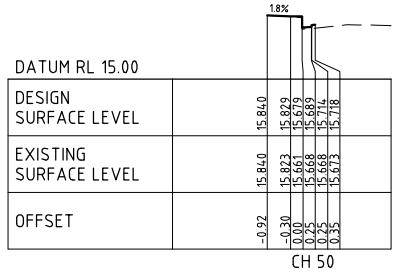

CH 50

North Channel Alignment - CROSS SECTIONS

Scale H: 1:100
V: 1:50

Cardno Grogan Richards
Consulting Engineers
Structural, Civil, Hydraulic, Traffic & Transportation

Cardno Victoria Pty Ltd ABN 47 106 610 913
150 Oxford Street Collingwood, VIC 3066
Tel: 03 8415 7777 Fax: 03 8415 7788
cardno@cardno.com.au www.cardno.com.au

Rev.	Revision Details	By	Date
B	PRELIMINARY ISSUE (RAMP REMOVED NEAR PIT 7)	PM	28/01/2015
A	PRELIMINARY ISSUE	PM	01/12/2014

CAD FILE	WK0338913	PROJECT NUMBER	-
DESIGNED BY	P. MITROVSKI	CONCEPT DOCS NO.	-
DRAWN BY	P. MITROVSKI	SURVEY REFERENCE	CARDNO
CHECKED	M. BRAJANOVSKI	SCALE	1:200
CHECKED DATE	-	DATUM	MGA94/AHD

North Point

CITY OF MELBOURNE

ENGINEERING SERVICES

APPROVED BY
Principal Engineer -
Group Manager -
Date -
Date -

STATUS: PRELIMINARY ISSUE

JOB LOCATION
LITERATURE LANE
OFF LITTLE LA TROBE STREET
PITCHER LANEWAY RECONSTRUCTION
NORTH CHANNEL ALIGNMENT CROSS SECTIONS

DRAWING NUMBER: WK0338913
NUMBER OF SHEETS: 5 OF 14
REVISION: B
DOCS NUMBER: -

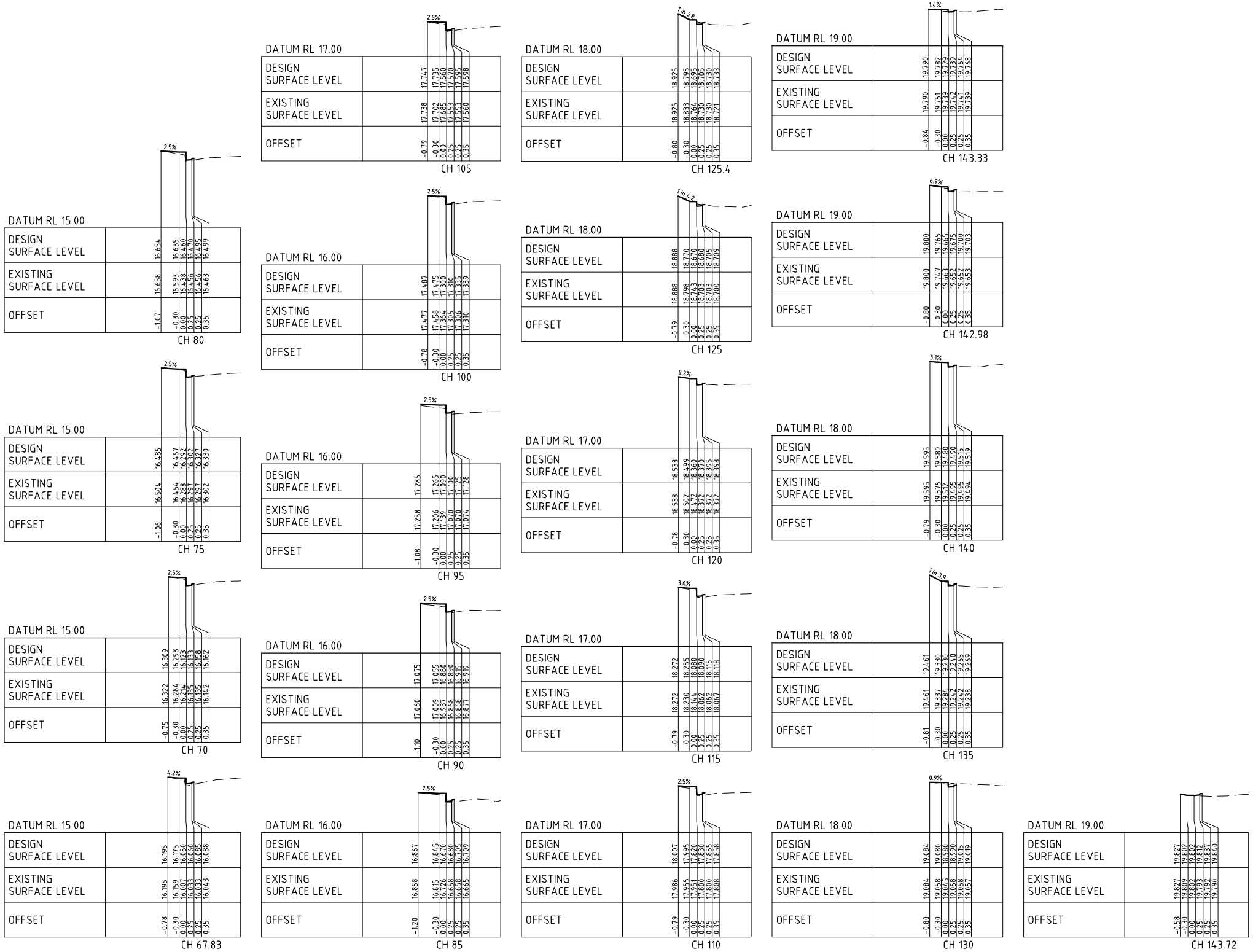

North Channel Alignment - CROSS SECTIONS 2

Scale H: 1:100
V: 1:50

Cardno Grogan Richards
Consulting Engineers
Structural, Civil, Hydraulic, Traffic & Transportation

Cardno Victoria Pty Ltd ABN 47 106 610 913
150 Oxford Street Collingwood VIC 3066
Tel: 03 8415 7777 Fax: 03 8415 7788
cardno@cardno.com.au www.cardno.com.au

Rev.	Revision Details	By	Date
B	PRELIMINARY ISSUE (RAMP REMOVED NEAR PIT 7)	PM	28/01/2015
A	PRELIMINARY ISSUE	PM	01/12/2014

CAD FILE	WK0338913	PROJECT NUMBER	-
DESIGNED BY	P. MITROVSKI	CONCEPT DOCS NO.	-
DRAWN BY	P. MITROVSKI	SURVEY REFERENCE	CARDNO
CHECKED	M. BRAJANOVSKI	SCALE	1:200
CHECKED DATE	-	DATUM	MGA94/AHD

North Point

CITY OF MELBOURNE

ENGINEERING SERVICES

APPROVED BY

Principal Engineer	Group Manager
-	-
Date -	Date -

STATUS: PRELIMINARY ISSUE

JOB LOCATION

LITERATURE LANE
OFF LITTLE LA TROBE STREET
PITCHER LANEWAY RECONSTRUCTION
NORTH CHANNEL ALIGNMENT CROSS SECTIONS 2

DRAWING NUMBER: WK0338913

NUMBER OF SHEETS: 6 OF 14

REVISION: B

DOCS NUMBER: -

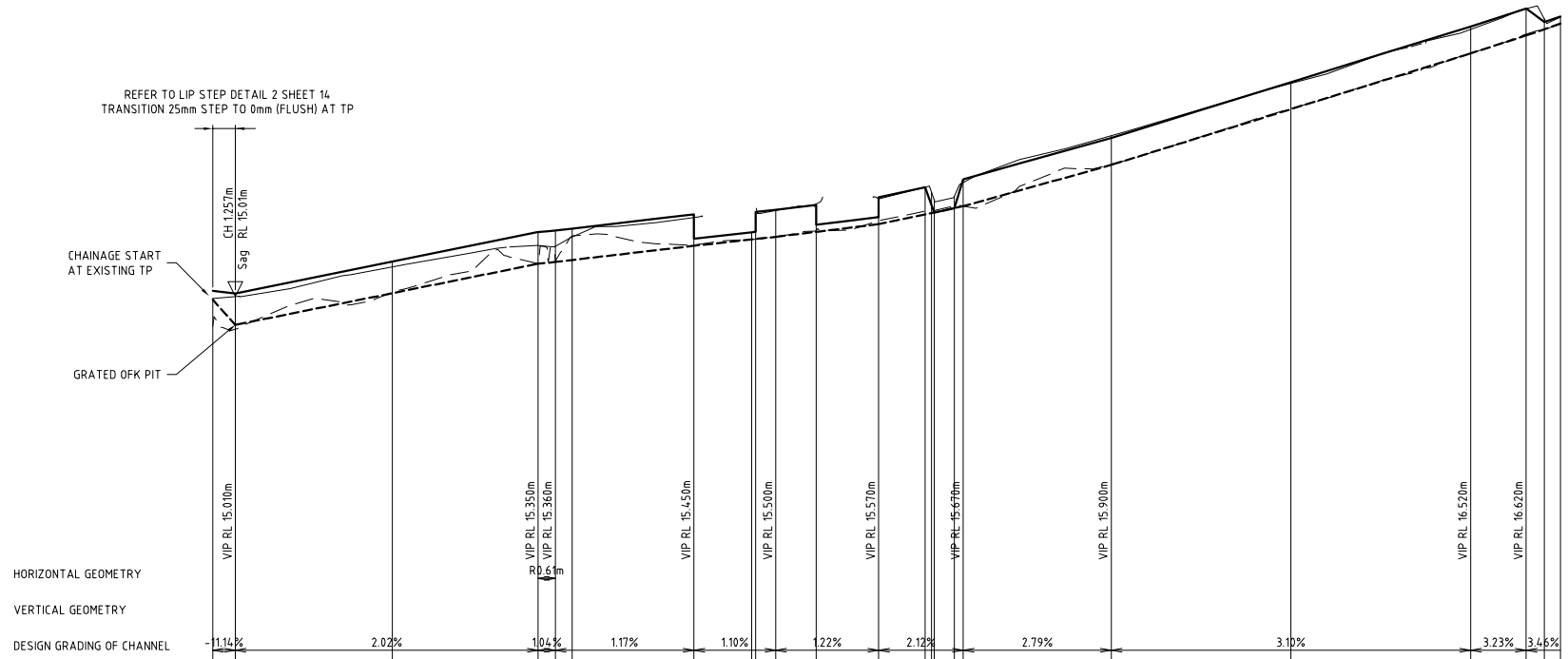

DATUM RL 13.0

DESIGN CHANNEL INVERT	15.150	15.010	15.186	15.350	15.360	15.371	15.450	15.485	15.488	15.500	15.528	15.570	15.625	15.632	15.636	15.659	15.670	15.900	16.210	16.520	16.620	16.655	16.686	
DESIGN TOP OF KERB	15.200	15.185	15.363	15.526	15.535	15.546	15.625	15.535	15.538	15.65	15.678	15.72	15.775	15.676	15.636	15.659	15.682	16.05	16.36	16.67	16.77	16.695	16.726	
EXISTING BACK OF KERB	15.157	15.167	15.332	15.452	15.446	15.500	15.607		15.646		15.682	15.712	15.777	15.748	15.707	15.726	15.802	16.062	16.353	16.653	16.769	16.714	16.723	
EXISTING CHANNEL INVERT	15.004	14.986	15.192	15.354	15.366	15.503	15.453	15.486	15.487	15.501	15.537	15.589	15.643	15.647	15.647	15.671	15.671	15.904	16.213	16.522	16.628	16.654	16.684	
CHAINAGE	0.00	1.26	10.00	18.11	19.07	20.00	26.78	30.00	30.70	31.33	33.58	37.06	39.65	40.00	40.15	41.27	41.77	50.00	60.00	70.00	73.10	74.10	75.00	

South Alignment - LONGITUDINAL SECTION

Scale H: 1:200
V: 1:20

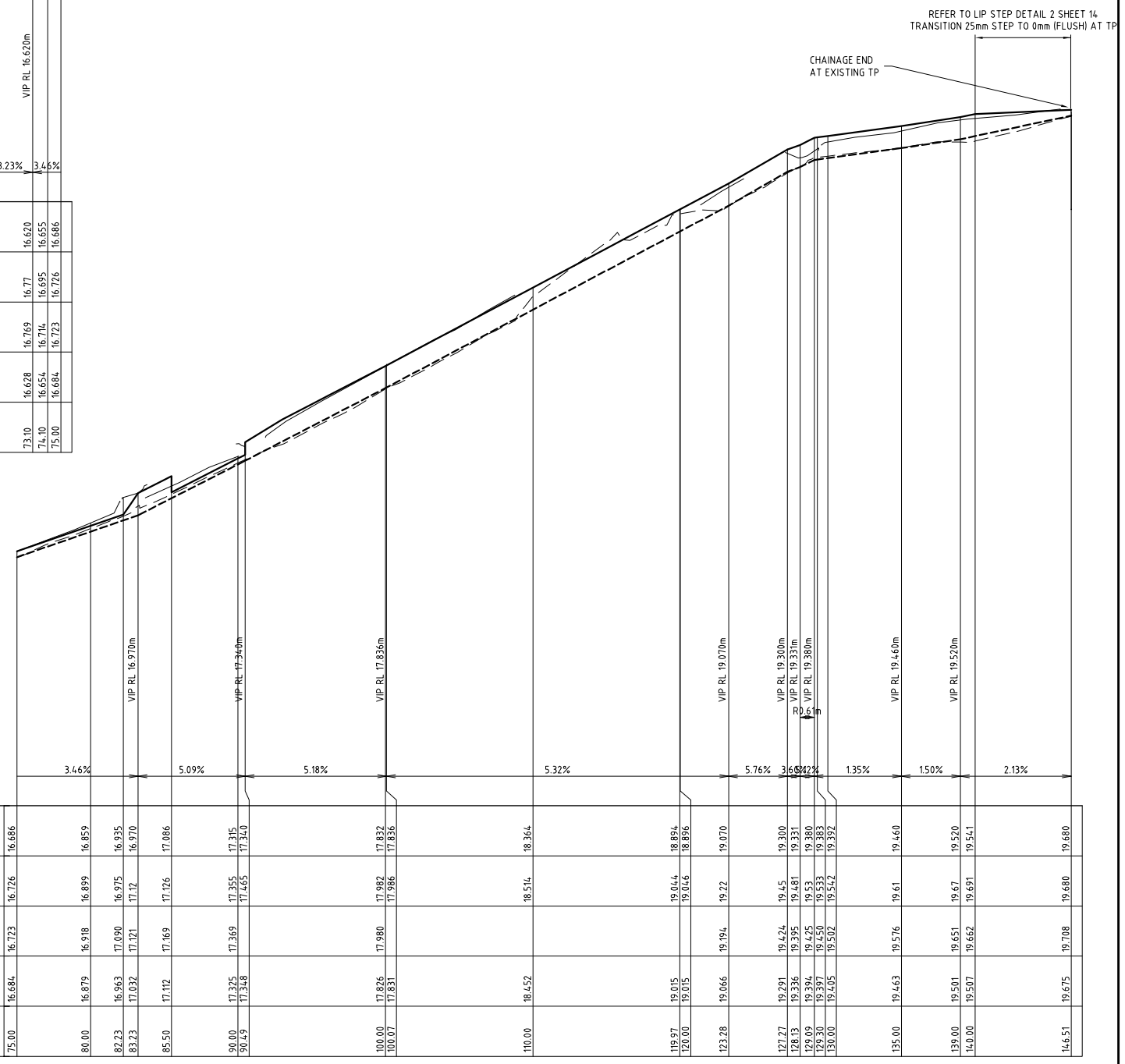

DATUM RL 15.0

DESIGN CHANNEL INVERT	16.686	16.859	16.935	16.970	17.086	17.315	17.340	17.832	17.836	18.364	18.894	18.896	19.070	19.300	19.331	19.380	19.383	19.392	19.460	19.520	19.541	19.680		
DESIGN TOP OF KERB	16.726	16.899	16.975	17.12	17.126	17.355	17.465	17.982	17.986	18.514	19.044	19.046	19.22	19.45	19.481	19.53	19.533	19.542	19.61	19.67	19.691	19.680		
EXISTING BACK OF KERB	16.723	16.918	17.090	17.121	17.169	17.369		17.980					19.194	19.424	19.395	19.425	19.450	19.502	19.576	19.651	19.662	19.708		
EXISTING CHANNEL INVERT	16.684	16.879	16.963	17.032	17.112	17.325	17.348	17.826	17.831	18.452	19.015	19.015	19.066	19.291	19.336	19.394	19.397	19.465	19.463	19.501	19.507	19.675		
CHAINAGE	75.00	80.00	82.23	83.23	85.50	90.00	90.49	100.00	100.07	110.00	119.97	120.00	122.28	127.27	128.13	129.09	129.30	130.00	135.00	139.00	140.00	146.51		

South Alignment - LONGITUDINAL SECTION

Scale H: 1:200
V: 1:20

Cardno Grogan Richards
Consulting Engineers
Structural, Civil, Hydraulic, Traffic & Transportation

Cardno Victoria Pty Ltd ABN 47 106 610 913
150 Oxford Street Collingwood, VIC 3066
Tel: 03 8415 7777 Fax: 03 8415 7788
cardno@cardno.com.au www.cardno.com.au

Rev.	Revision Details	By	Date
B	PRELIMINARY ISSUE (RAMP REMOVED NEAR PIT 7)	PM	28/01/2015
A	PRELIMINARY ISSUE	PM	01/12/2014

CAD FILE	WK0338913	PROJECT NUMBER	-
DESIGNED BY	P. MITROVSKI	CONCEPT DOCS NO.	-
DRAWN BY	P. MITROVSKI	SURVEY REFERENCE	CARDNO
CHECKED	M. BRAJANOVSKI	SCALE	1:200
CHECKED DATE	-	DATUM	MGA94/AHD

North Point

CITY OF MELBOURNE

ENGINEERING SERVICES

APPROVED BY

Principal Engineer	Group Manager
-	-
Date -	Date -

STATUS: PRELIMINARY ISSUE

JOB LOCATION

LITERATURE LANE
OFF LITTLE LA TROBE STREET
PITCHER LANEWAY RECONSTRUCTION
SOUTH ALIGNMENT LONGITUDINAL SECTION

DRAWING NUMBER: WK0338913

NUMBER OF SHEETS: 7 OF 14

REVISION: B

DOCS NUMBER: -

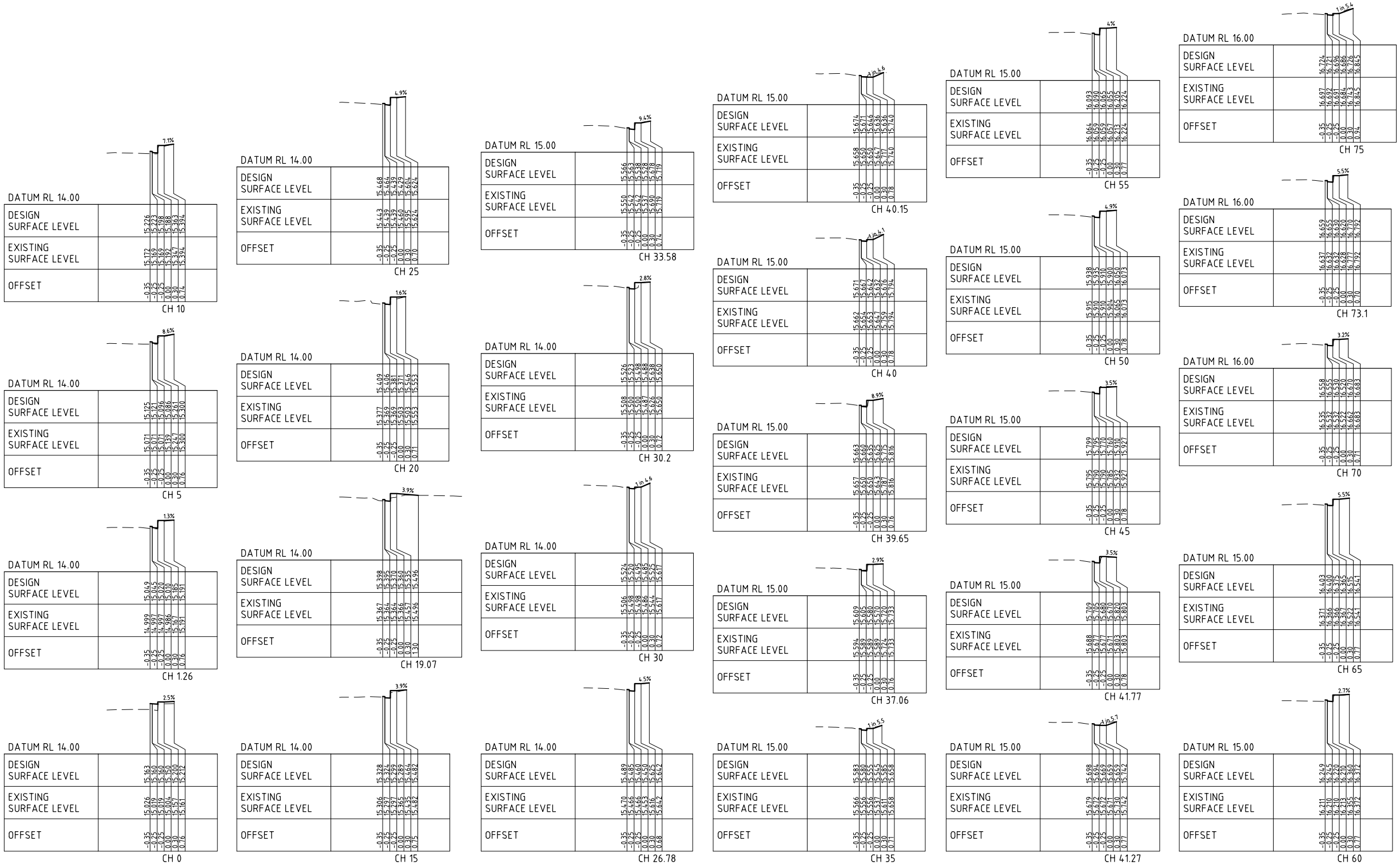

South Alignment - CROSS SECTIONS

Scale H: 1:100
V: 1:50

Cardno Grogan Richards
Consulting Engineers
Structural, Civil, Hydraulic, Traffic & Transportation

Cardno Victoria Pty Ltd ABN 47 106 610 913
150 Oxford Street Collingwood, VIC 3066
Tel: 03 8415 7777 Fax: 03 8415 7788
cardno@cardno.com.au www.cardno.com.au

Rev.	Revision Details	By	Date
B	PRELIMINARY ISSUE (RAMP REMOVED NEAR PIT 7)	PM	28/01/2015
A	PRELIMINARY ISSUE	PM	01/12/2014

CAD FILE	WK0338913	PROJECT NUMBER	-
DESIGNED BY	P. MITROVSKI	CONCEPT DOCS NO.	-
DRAWN BY	P. MITROVSKI	SURVEY REFERENCE	CARDNO
CHECKED	M. BRAJANOVSKI	SCALE	1:200
CHECKED DATE	-	DATUM	MGA94/AHD

North Point

CITY OF MELBOURNE

ENGINEERING SERVICES

APPROVED BY

Principal Engineer -
Group Manager -
Date -
Date -

STATUS: PRELIMINARY ISSUE

JOB LOCATION
LITERATURE LANE
OFF LITTLE LA TROBE STREET
PITCHER LANEWAY RECONSTRUCTION
SOUTH ALIGNMENT CROSS SECTIONS

DRAWING NUMBER: WK0338913
NUMBER OF SHEETS: 8 OF 14
REVISION: B
DOCS NUMBER: -

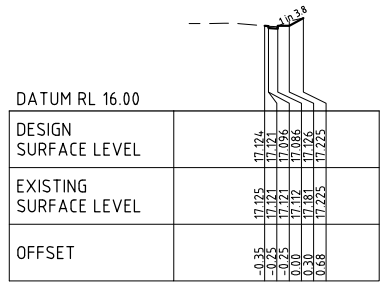

CH 85.5

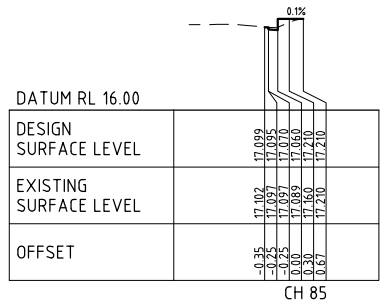

CH 85

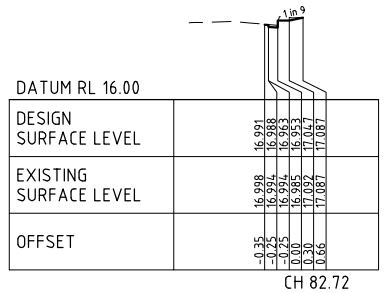

CH 82.72

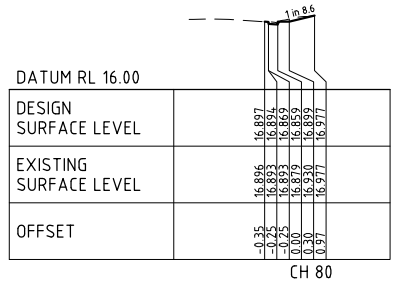

CH 80

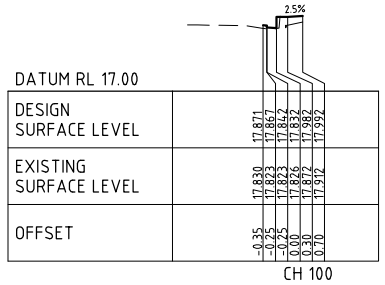

CH 100

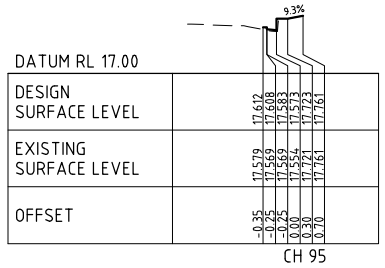

CH 95

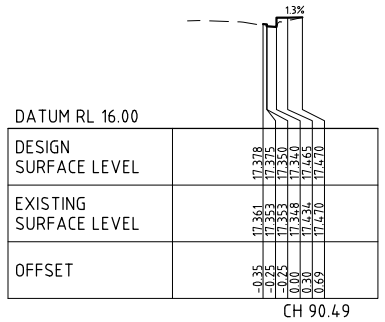

CH 90.49

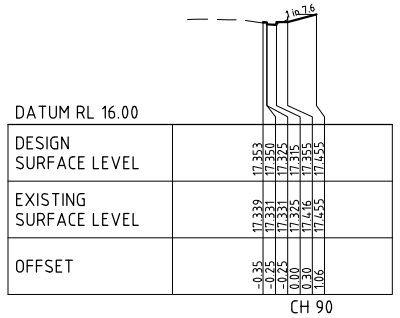

CH 90

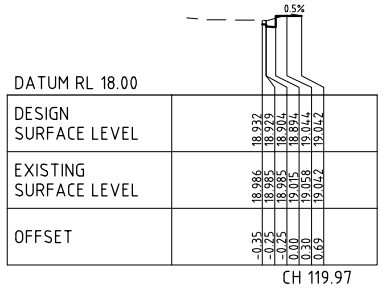

CH 119.97

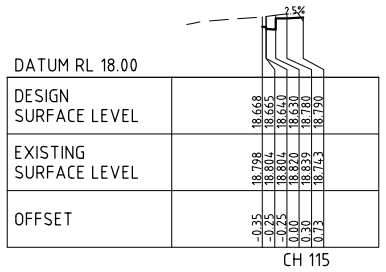

CH 115

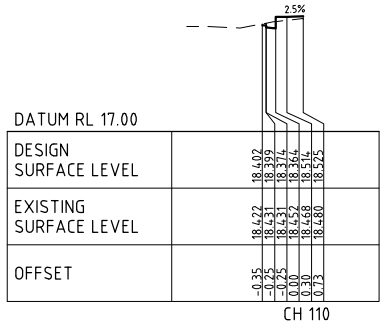

CH 110

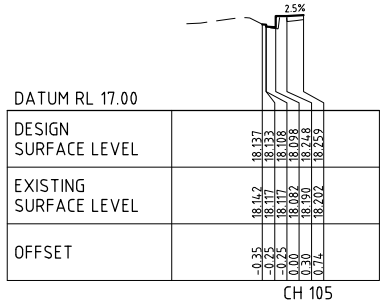

CH 105

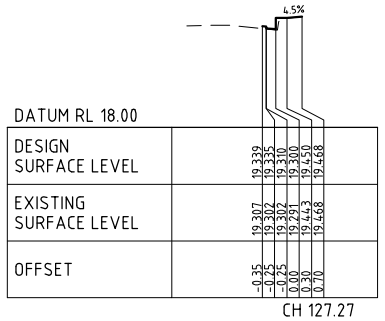

CH 127.27

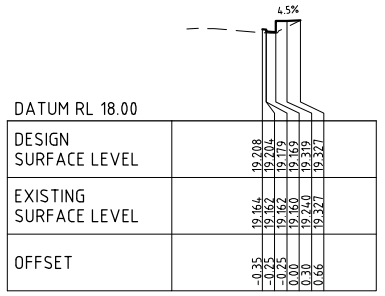

CH 125

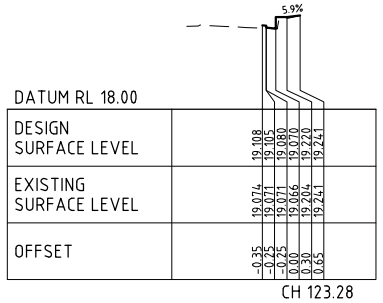

CH 123.28

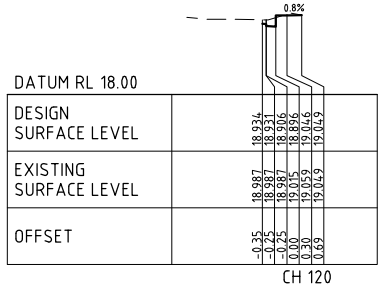

CH 120

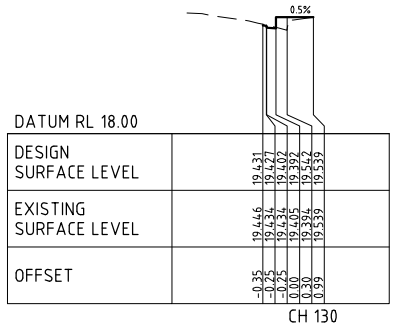

CH 130

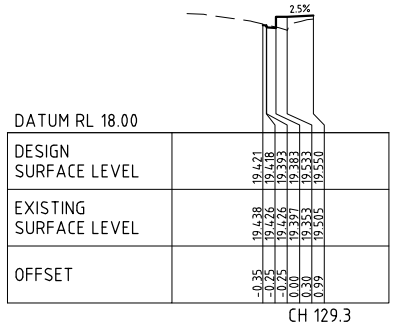

CH 129.3

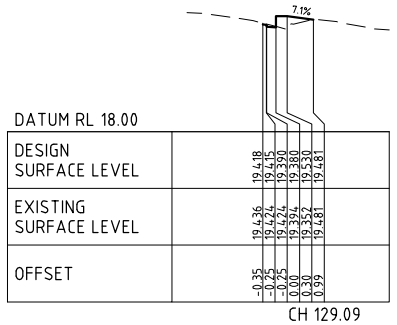

CH 129.09

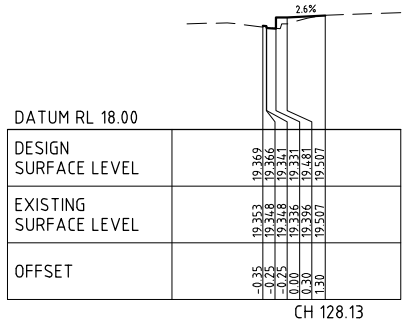

CH 128.13

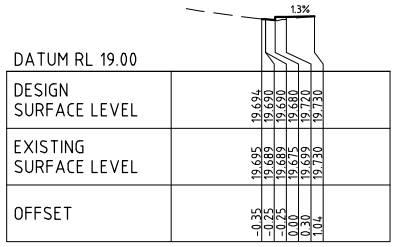

CH 146.51

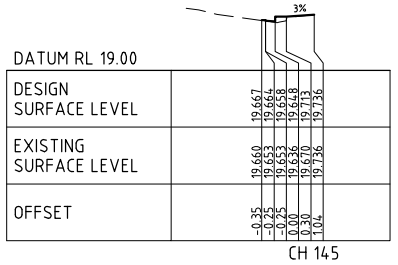

CH 145

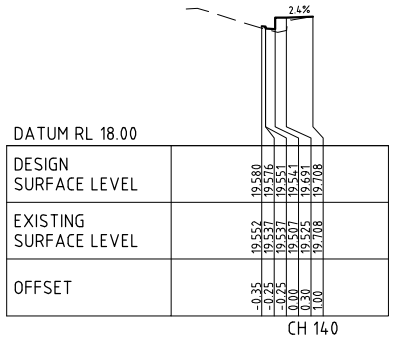

CH 140

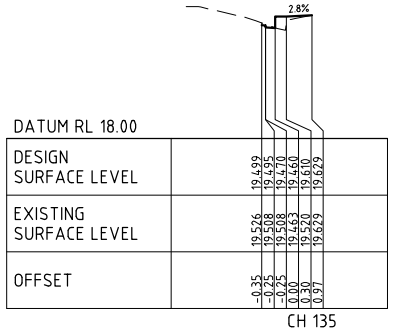

CH 135

South Alignment - CROSS SECTIONS 2

Scale H: 1:100
V: 1:50

Cardno Grogan Richards
Consulting Engineers
Structural, Civil, Hydraulic, Traffic & Transportation

Cardno Victoria Pty Ltd ABN 47 106 610 913
150 Oxford Street Collingwood, VIC 3066
Tel: 03 8415 7777 Fax: 03 8415 7788
cardno@cardno.com.au www.cardno.com.au

Rev.	Revision Details	By	Date
B	PRELIMINARY ISSUE (RAMP REMOVED NEAR PIT 7)	PM	28/01/2015
A	PRELIMINARY ISSUE	PM	01/12/2014

CAD FILE	WK0338913	PROJECT NUMBER	-
DESIGNED BY	P. MITROVSKI	CONCEPT DOCS NO.	-
DRAWN BY	P. MITROVSKI	SURVEY REFERENCE	CARDNO
CHECKED	M. BRAJANOVSKI	SCALE	1:200
CHECKED DATE	-	DATUM	MGA94/AHD

North Point

CITY OF MELBOURNE

ENGINEERING SERVICES

APPROVED BY
Principal Engineer -
Group Manager -
Date -
Date -

STATUS: PRELIMINARY ISSUE

JOB LOCATION
LITERATURE LANE
OFF LITTLE LA TROBE STREET
PITCHER LANEWAY RECONSTRUCTION
SOUTH ALIGNMENT CROSS SECTIONS 2

DRAWING NUMBER: WK0338913
NUMBER OF SHEETS: 9 OF 14
REVISION: B
DOCS NUMBER: -

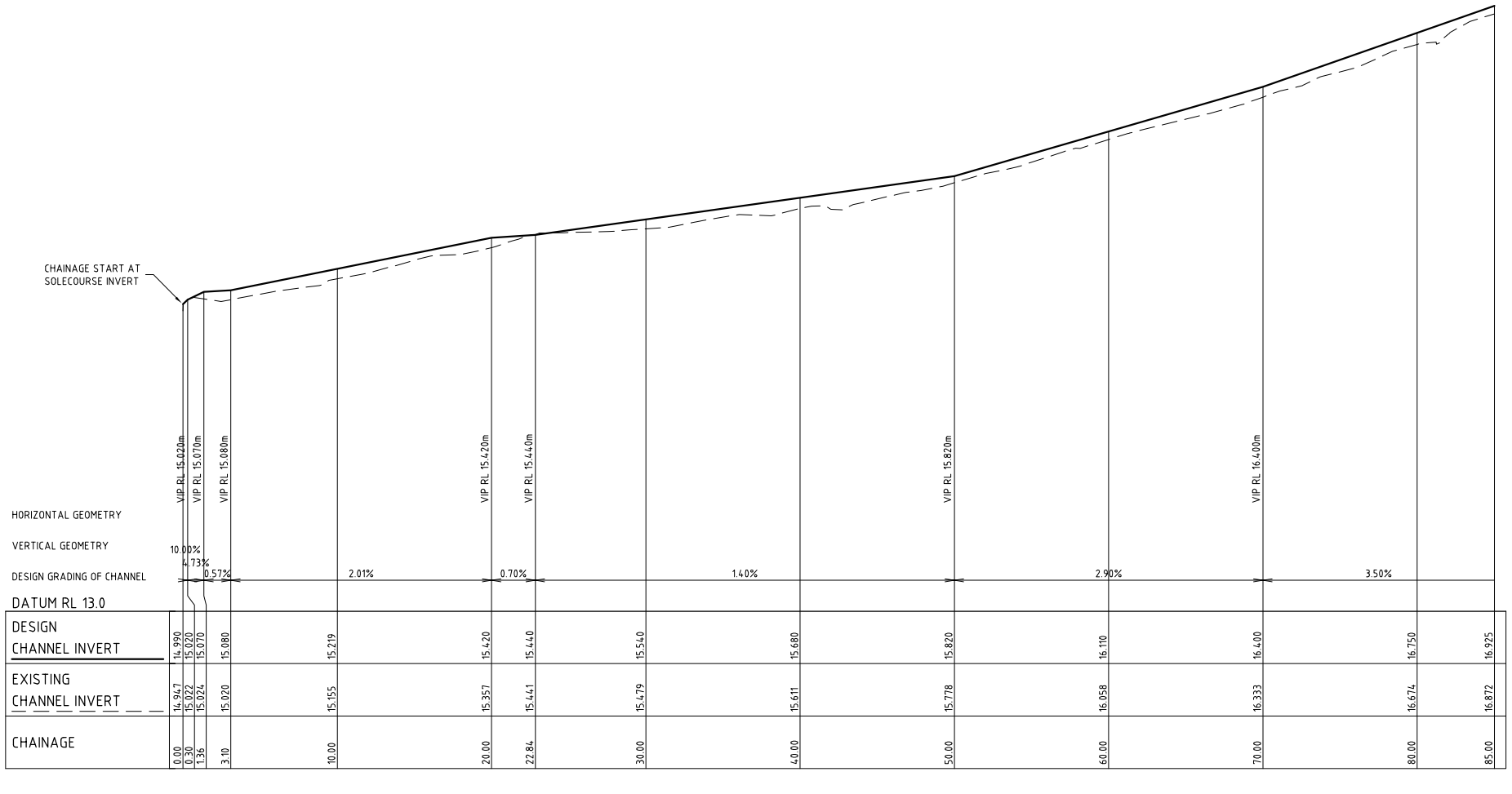

Laneway Crown CL - LONGITUDINAL SECTION

Scale H: 1:200
V: 1:20

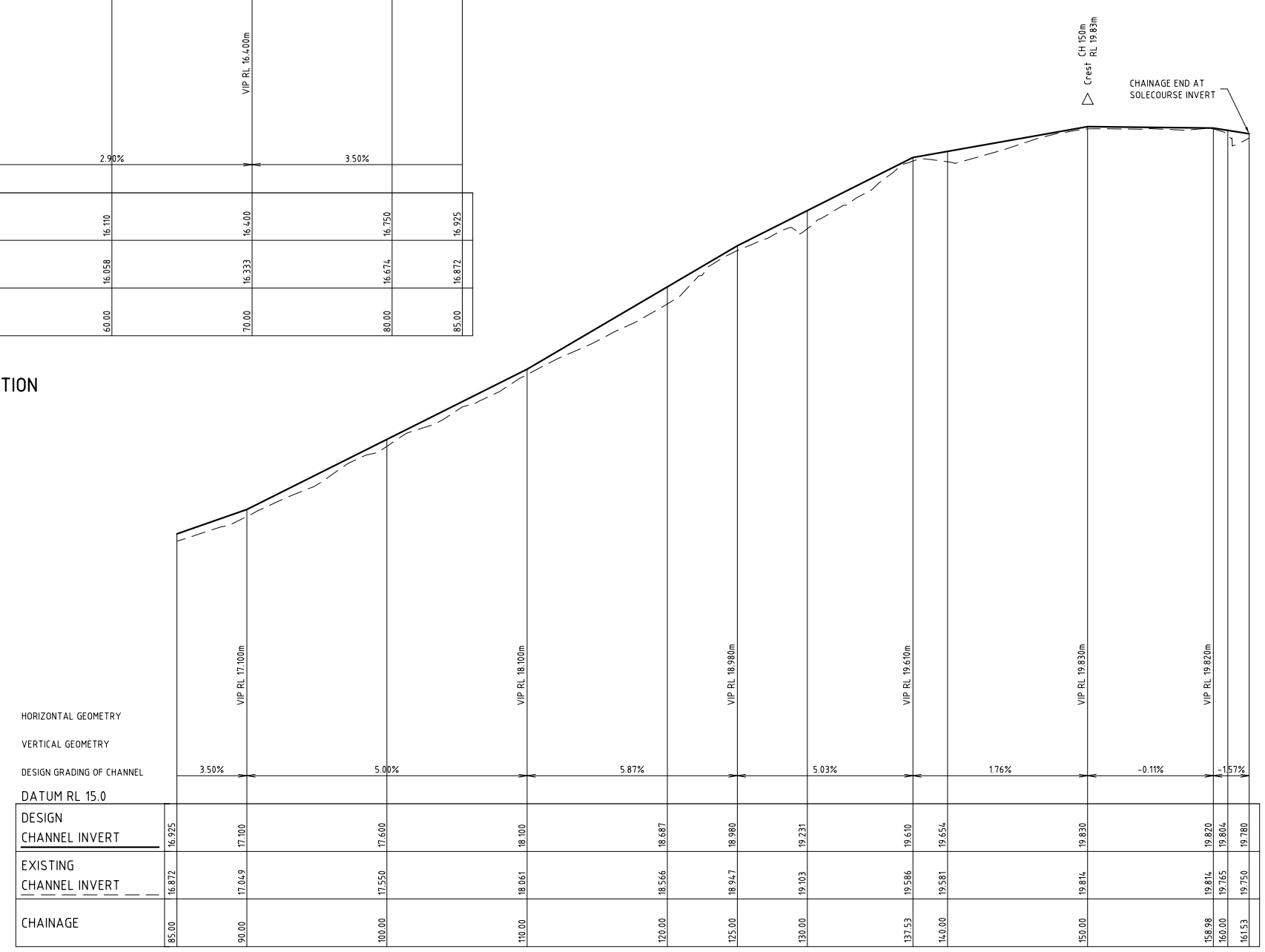

Laneway Crown CL - LONGITUDINAL SECTION

Scale H: 1:200
V: 1:20

Cardno Grogan Richards
Consulting Engineers
Structural, Civil, Hydraulic, Traffic & Transportation

Cardno Victoria Pty Ltd ABN 47 106 610 913
150 Oxford Street Collingwood, VIC 3066
Tel: 03 8415 7777 Fax: 03 8415 7788
cardno@cardno.com.au www.cardno.com.au

Rev.	Revision Details	By	Date
B	PRELIMINARY ISSUE (RAMP REMOVED NEAR PIT 7)	PM	28/01/2015
A	PRELIMINARY ISSUE	PM	01/12/2014

CAD FILE	WK0338913	PROJECT NUMBER	-
DESIGNED BY	P. MITROVSKI	CONCEPT DOCS NO.	-
DRAWN BY	P. MITROVSKI	SURVEY REFERENCE	CARDNO
CHECKED	M. BRAJANOVSKI	SCALE	1:200
CHECKED DATE	-	DATUM	MGA94/AHD

North Point

CITY OF MELBOURNE

ENGINEERING SERVICES

APPROVED BY

Principal Engineer	Group Manager
-	-
Date -	Date -

STATUS: PRELIMINARY ISSUE

JOB LOCATION

LITERATURE LANE
OFF LITTLE LA TROBE STREET
PITCHER LANEWAY RECONSTRUCTION
LANEWAY CROWN CL LONGITUDINAL SECTION

DRAWING NUMBER: WK0338913

NUMBER OF SHEETS: 10 OF 14

REVISION: B

DOCS NUMBER: -

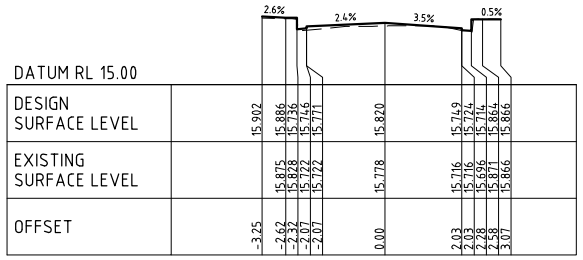

CH 50

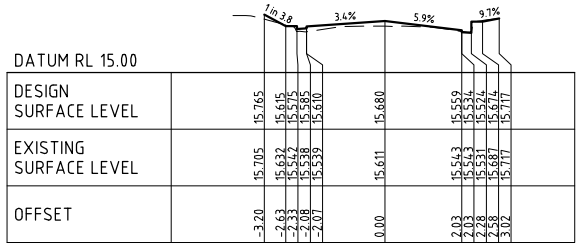

CH 40

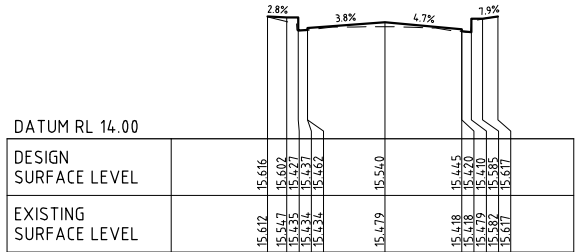

CH 30

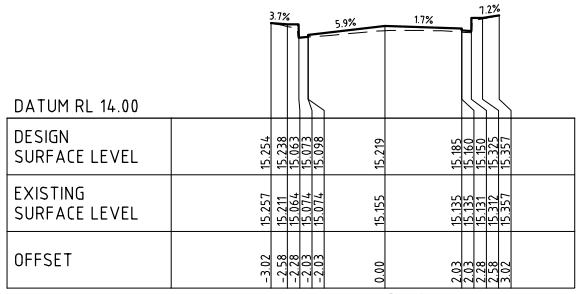

CH 10

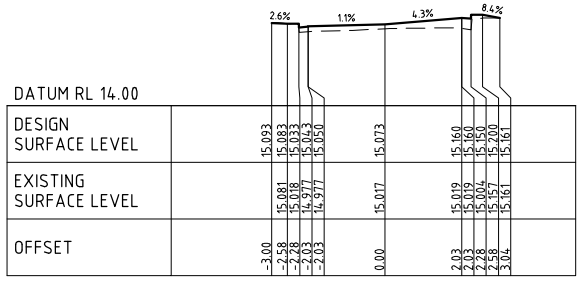

CH 1.85

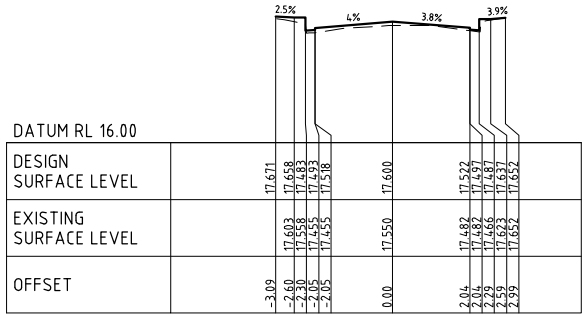

CH 100

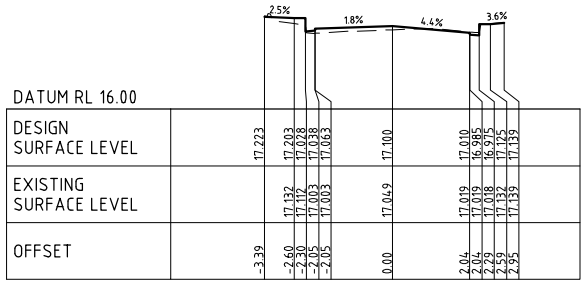

CH 90

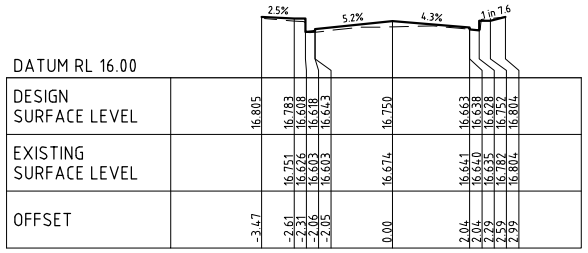

CH 80

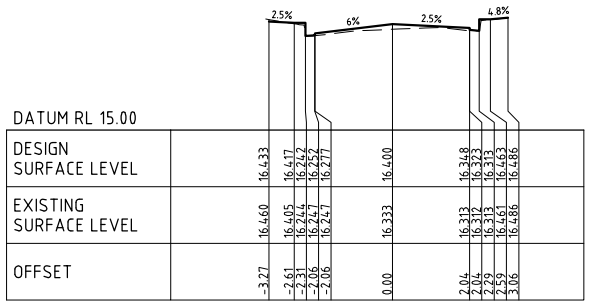

CH 70

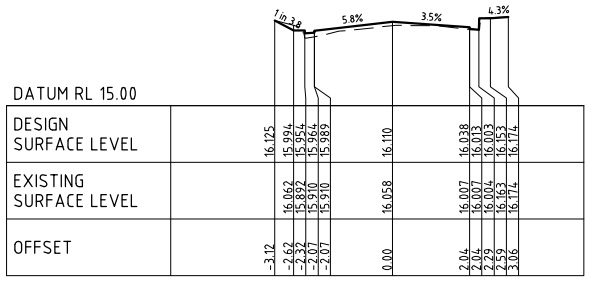

CH 60

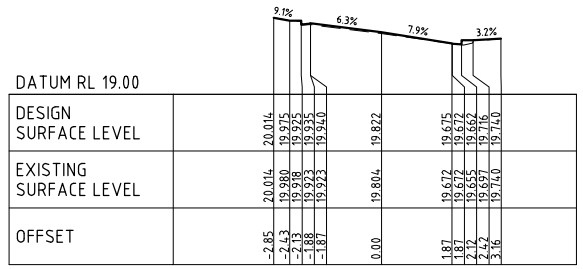

CH 157

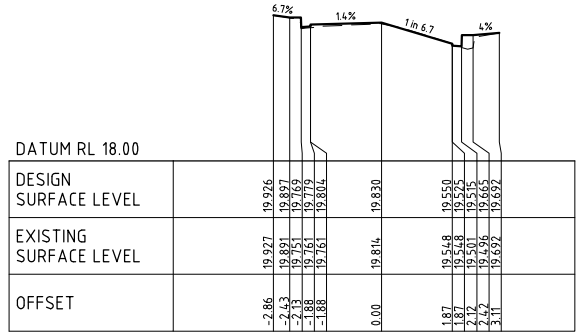

CH 150

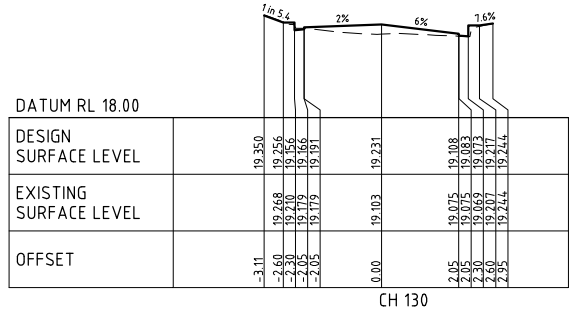

CH 130

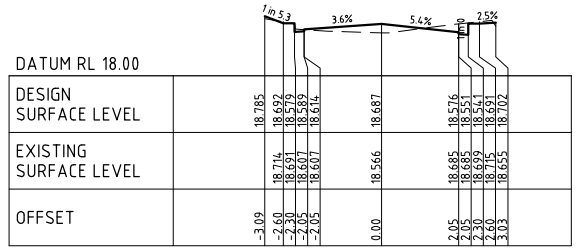

CH 120

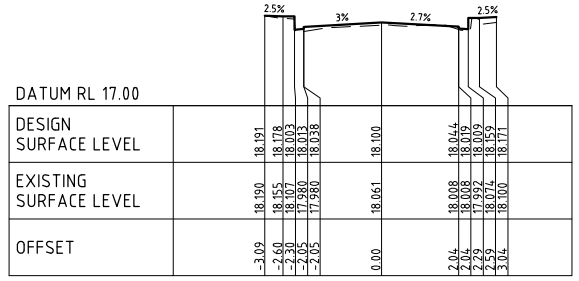

CH 110

CROWN CL - CROSS SECTIONS

Scale H: 1:100
V: 1:50

Cardno Grogan Richards
Consulting Engineers
Structural, Civil, Hydraulic, Traffic & Transportation

Cardno Victoria Pty Ltd ABN 47 106 610 913
150 Oxford Street Collingwood, VIC 3066
Tel: 03 8415 7777 Fax: 03 8415 7788
cardno@cardno.com.au www.cardno.com.au

Rev.	Revision Details	By	Date
B	PRELIMINARY ISSUE (RAMP REMOVED NEAR PIT 7)	PM	28/01/2015
A	PRELIMINARY ISSUE	PM	01/12/2014

CAD FILE	WK0338913	PROJECT NUMBER	-
DESIGNED BY	P. MITROVSKI	CONCEPT DOCS NO.	-
DRAWN BY	P. MITROVSKI	SURVEY REFERENCE	CARDNO
CHECKED	M. BRAJANOVSKI	SCALE	1:200
CHECKED DATE	-	DATUM	MGA94/AHD

North Point

CITY OF MELBOURNE

ENGINEERING SERVICES

APPROVED BY

Principal Engineer	Group Manager
-	-
Date -	Date -

STATUS: PRELIMINARY ISSUE

JOB LOCATION
LITERATURE LANE
OFF LITTLE LA TROBE STREET
PITCHER LANEWAY RECONSTRUCTION
CROWN CL CROSS SECTIONS

DRAWING NUMBER: WK0338913

NUMBER OF SHEETS: 11 OF 14

REVISION: B

DOCS NUMBER: -

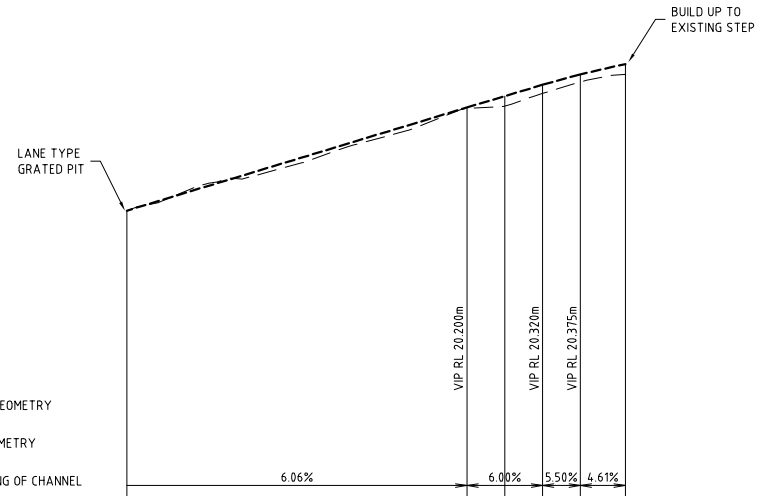

DATUM RL 18.0

DESIGN CHANNEL INVERT	19.655	20.200	20.260	20.320	20.375	20.430
EXISTING CHANNEL INVERT	19.654	20.195	20.208	20.274	20.335	20.375
CHAINAGE	0.00	9.00	10.00	11.00	12.00	13.19

East 'V' Channel Alignment 1 - LONGITUDINAL SECTION

Scale H: 1:100
V: 1:20

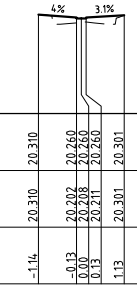

DATUM RL 19.00

DESIGN SURFACE LEVEL	20.310	20.260	20.260	20.260	20.301
EXISTING SURFACE LEVEL	20.310	20.202	20.208	20.211	20.301
OFFSET	-1.14	-0.13	0.00	0.13	1.13

CH 10

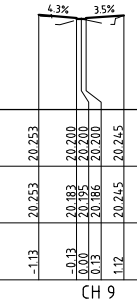

DATUM RL 19.00

DESIGN SURFACE LEVEL	20.253	20.200	20.200	20.200	20.245
EXISTING SURFACE LEVEL	20.253	20.183	20.195	20.186	20.245
OFFSET	-1.13	-0.13	0.00	0.13	1.12

CH 9

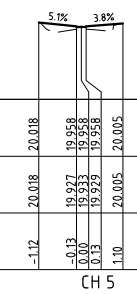

DATUM RL 19.00

DESIGN SURFACE LEVEL	20.018	19.958	19.958	19.958	20.005
EXISTING SURFACE LEVEL	20.018	19.927	19.933	19.929	20.005
OFFSET	-1.12	-0.13	0.00	0.13	1.10

CH 5

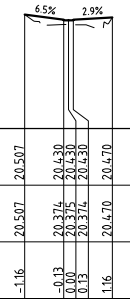

DATUM RL 19.00

DESIGN SURFACE LEVEL	20.507	20.430	20.430	20.430	20.470
EXISTING SURFACE LEVEL	20.507	20.374	20.375	20.374	20.470
OFFSET	-1.16	-0.13	0.00	0.13	1.16

CH 13.19

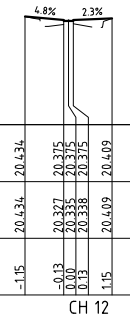

DATUM RL 19.00

DESIGN SURFACE LEVEL	20.434	20.375	20.375	20.375	20.409
EXISTING SURFACE LEVEL	20.434	20.327	20.335	20.338	20.409
OFFSET	-1.15	-0.13	0.00	0.13	1.15

CH 12

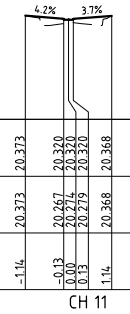

DATUM RL 19.00

DESIGN SURFACE LEVEL	20.373	20.320	20.320	20.320	20.368
EXISTING SURFACE LEVEL	20.373	20.267	20.274	20.279	20.368
OFFSET	-1.14	-0.13	0.00	0.13	1.14

CH 11

East 'V' Channel Alignment 1 - CROSS SECTIONS

Scale H: 1:100
V: 1:50

Cardno Grogan Richards
Consulting Engineers
Structural, Civil, Hydraulic, Traffic & Transportation

Cardno Victoria Pty Ltd ABN 47 106 610 913
150 Oxford Street Collingwood, VIC 3066
Tel: 03 8415 7777 Fax: 03 8415 7788
cardno@cardno.com.au www.cardno.com.au

Rev.	Revision Details	By	Date
B	PRELIMINARY ISSUE (RAMP REMOVED NEAR PIT 7)	PM	28/01/2015
A	PRELIMINARY ISSUE	PM	01/12/2014

CAD FILE	WK0338913	PROJECT NUMBER	-
DESIGNED BY	P. MITROVSKI	CONCEPT DOCS NO.	-
DRAWN BY	P. MITROVSKI	SURVEY REFERENCE	CARDNO
CHECKED	M. BRAJANOVSKI	SCALE	1:200
CHECKED DATE	-	DATUM	MGA94/AHD

North Point

CITY OF MELBOURNE

ENGINEERING SERVICES

APPROVED BY

Principal Engineer	Group Manager
-	-
Date -	Date -

STATUS: PRELIMINARY ISSUE

JOB LOCATION
LITERATURE LANE
OFF LITTLE LA TROBE STREET
PITCHER LANEWAY RECONSTRUCTION
EAST 'V' CHANNEL ALIGNMENT 1 LONGITUDINAL & CROSS SECTIONS

DRAWING NUMBER: WK0338913
NUMBER OF SHEETS: 12 OF 14
REVISION: B
DOCS NUMBER: -

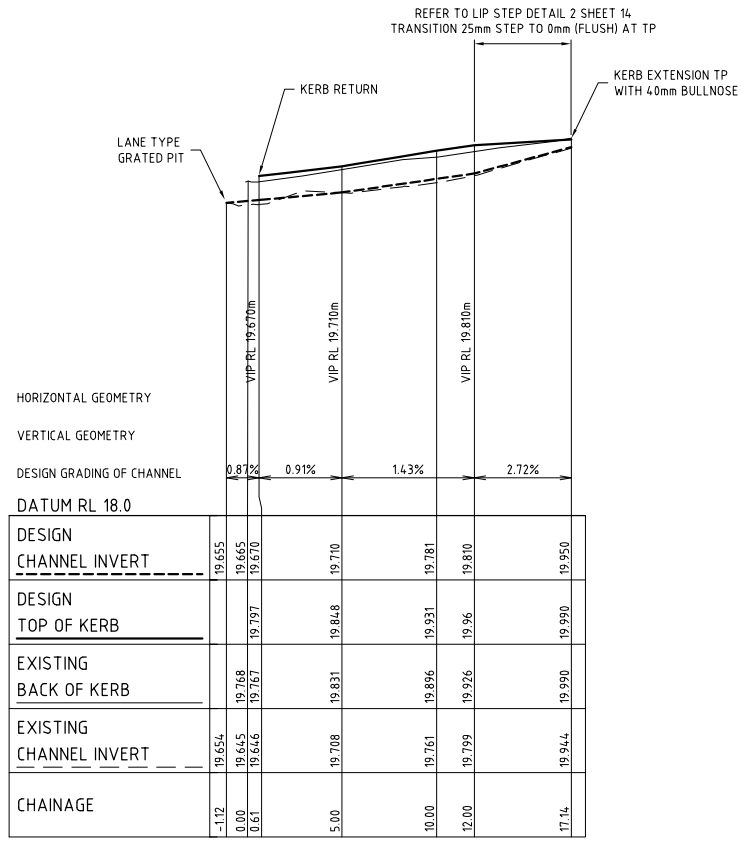

East Channel Alignment 2 - LONGITUDINAL SECTION

Scale H: 1:200
V: 1:20

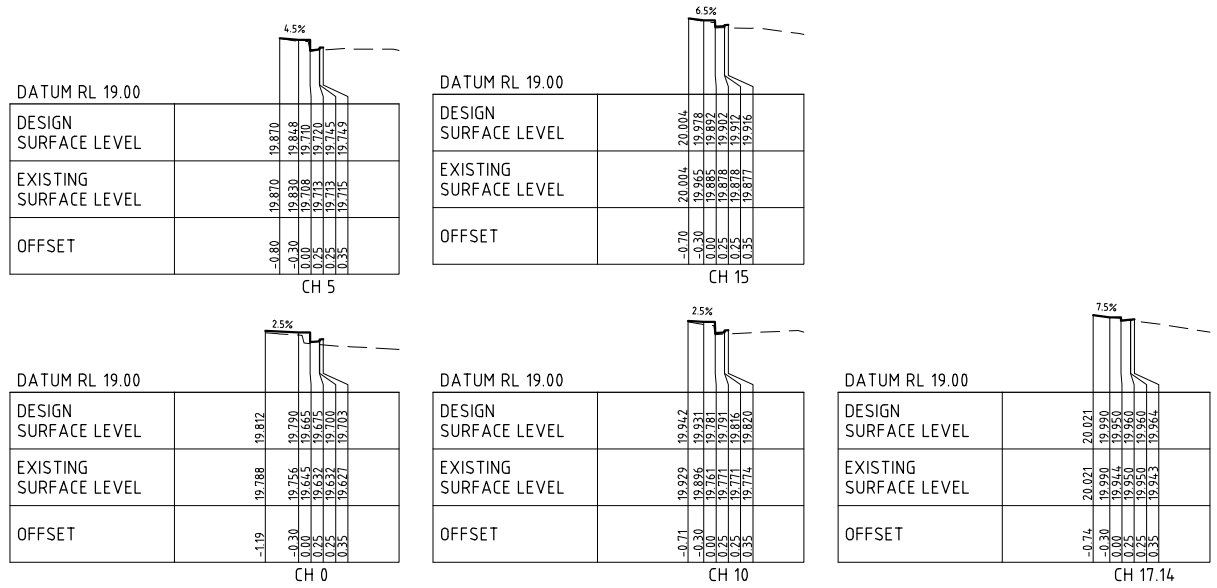

East Channel Alignment 2- CROSS SECTIONS

Scale H: 1:100
V: 1:50

Cardno Grogan Richards
Consulting Engineers
Structural, Civil, Hydraulic, Traffic & Transportation
Cardno Victoria Pty Ltd ABN 47 106 610 913
150 Oxford Street Collingwood, VIC 3066
Tel: 03 8415 7777 Fax: 03 8415 7788
cardno@cardno.com.au www.cardno.com.au

Rev.	Revision Details	By	Date
B	PRELIMINARY ISSUE (RAMP REMOVED NEAR PIT 7)	PM	28/01/2015
A	PRELIMINARY ISSUE	PM	01/12/2014

CAD FILE	WK0338913	PROJECT NUMBER	-
DESIGNED BY	P. MITROVSKI	CONCEPT DOCS NO.	-
DRAWN BY	P. MITROVSKI	SURVEY REFERENCE	CARDNO
CHECKED	M. BRAJANOVSKI	SCALE	1:200
CHECKED DATE	-	DATUM	MGA94/AHD

North Point

CITY OF MELBOURNE

ENGINEERING SERVICES

APPROVED BY

Principal Engineer	Group Manager
-	-
Date -	Date -

STATUS: PRELIMINARY ISSUE

JOB LOCATION
LITERATURE LANE
OFF LITTLE LA TROBE STREET
PITCHER LANEWAY RECONSTRUCTION
EAST CHANNEL ALIGNMENT 2 LONGITUDINAL & CROSS SECTIONS

DRAWING NUMBER: WK0338913
NUMBER OF SHEETS: 13 OF 14
REVISION: B
DOCS NUMBER: -

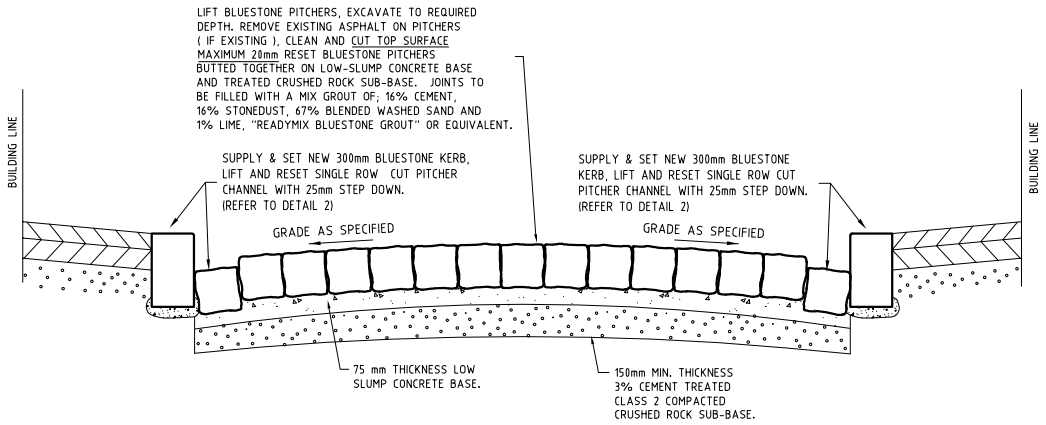

PITCHER LANEWAY DETAIL
SECTION A - A
NOT TO SCALE

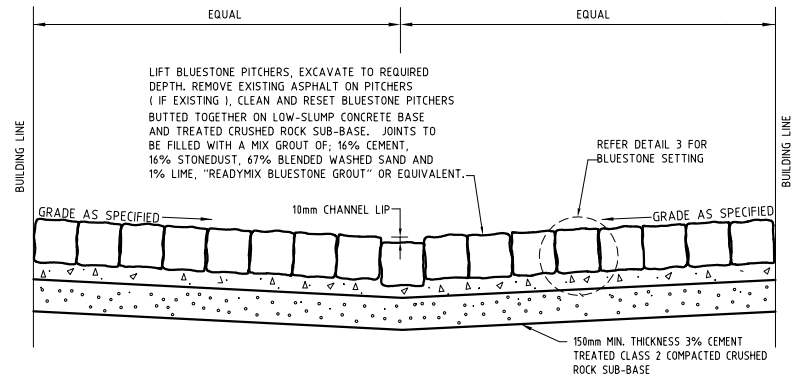

CENTRE CHANNEL PITCHER LANEWAY
SECTION B - B
NOT TO SCALE

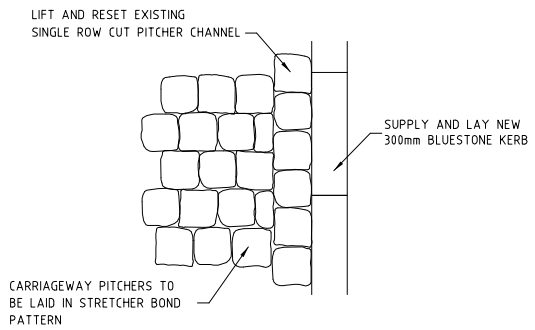

PITCHER PAVING DETAIL WITH BUFFER KERB
1 -
NOT TO SCALE

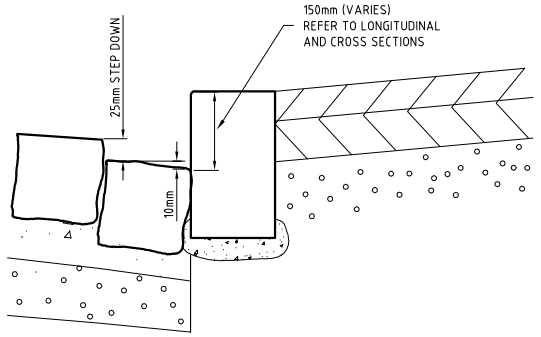

LITERATURE LANE
25mm LIP STEP CHANNEL DETAIL
2 -
NOT TO SCALE

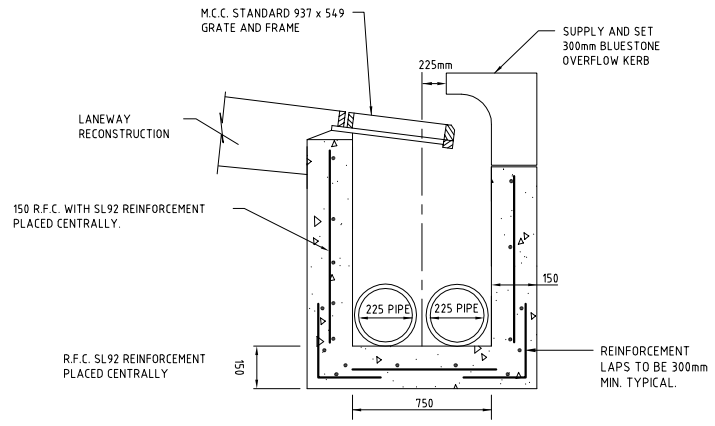

GRATED PIT NO:2 DETAIL
4 -
NOT TO SCALE

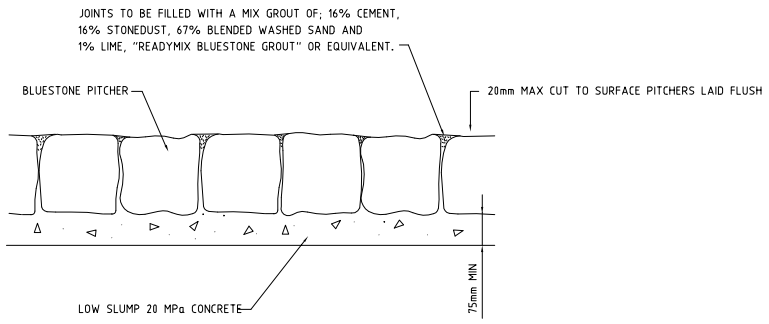

TYPICAL BLUESTONE PITCHER PAVING SETTING DETAIL
3 -
NOT TO SCALE

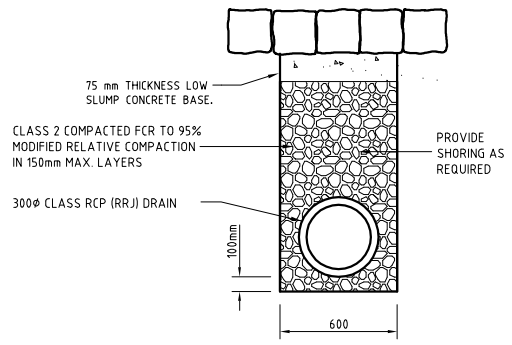

DRAIN LAYING SECTION WITHIN ROADWAY
5 -
NOT TO SCALE

Cardno Grogan Richards
Consulting Engineers
Structural, Civil, Hydraulic, Traffic & Transportation
Cardno Victoria Pty Ltd ABN 47 106 610 913
150 Oxford Street Collingwood, VIC 3066
Tel: 03 8415 7777 Fax: 03 8415 7788
cardno@cardno.com.au www.cardno.com.au

Rev.	Revision Details	By	Date
B	PRELIMINARY ISSUE (RAMP REMOVED NEAR PIT 7)	PM	28/01/2015
A	PRELIMINARY ISSUE	PM	01/12/2014

CAD FILE	WK0338913	PROJECT NUMBER	-
DESIGNED BY	P. MITROVSKI	CONCEPT DOCS NO.	-
DRAWN BY	P. MITROVSKI	SURVEY REFERENCE	CARDNO
CHECKED	M. BRAJANOVSKI	SCALE	1:200
CHECKED DATE	-	DATUM	MGA94/AHD

North Point

CITY OF MELBOURNE

ENGINEERING SERVICES

APPROVED BY
Principal Engineer -
Group Manager -
Date -
Date -

STATUS: PRELIMINARY ISSUE

JOB LOCATION
LITERATURE LANE
OFF LITTLE LA TROBE STREET
PITCHER LANEWAY RECONSTRUCTION
TYPICAL DETAILS

DRAWING NUMBER: WK0338913
NUMBER OF SHEETS: 14 OF 14
REVISION: B
DOCS NUMBER: -